Final Project Plan

And

Environmental Assessment

For

GIWW Bankline Restoration Project (TE-43)

Terrebonne Parish, Louisiana

United States Department of Agriculture

Natural Resources Conservation Service

December 2002

GIWW Bankline Restoration Project (TE-43)
Project Plan and Environmental Assessment

ABSTRACT

This document describes the proposed project and evaluates potential impacts attributed to bankline restoration measures along the Gulf Intracoastal Waterway (GIWW) in Terrebonne Parish, Louisiana. The recommended plan consists of constructing approximately 37,000 feet of bankline restoration structures adjacent to critically eroding portions of the southern bank of the GIWW. The project is funded under authorization of Public Law 101-646 on the Tenth Priority Project List. The Louisiana Department of Natural Resources (LDNR) will provide the non-federal share of the total cost of the project. No significant environmental impacts are anticipated as a result of project implementation. This document is intended to fulfill the requirements of the National Environmental Policy Act (NEPA).

Prepared under the authority of the Coastal Wetlands Planning, Protection, and Restoration Act of November 1990, House Document 646, 101st Congress.

Prepared by: U.S. Department of Agriculture, Natural Resources Conservation Service.

For information, contact: Donald W. Gohmert, State Conservationist
Natural Resources Conservation Service
3737 Government Street
Alexandria, Louisiana 71302
(318) 473-7751

The United States Department of Agriculture (USDA) prohibits discrimination in its programs on the basis of race, color, national origin, sex, religion, age, disability, political beliefs, sexual orientation, and marital or familial status. (Not all prohibited bases apply to all programs.) Persons with disabilities who require alternative means for communication of program information (Braille, large print, audiotape, etc.) should contact USDA's TARGET Center at 202-720-2600 (voice and TDD).

To file a complaint, write the Secretary of Agriculture, U.S. Department of Agriculture, Washington, D.C. 20250 or call 1-800-245-6340 (voice) or 202-720-1127 (TDD). USDA is an equal opportunity employer.

TABLE OF CONTENTS

ABSTRACT i

TABLE OF CONTENTS ii

SUMMARY OF PROJECT PLAN/EA 1

INTRODUCTION 3

PROJECT SETTING 3

- LOCATION 3
- CLIMATE 3
- SOILS 5
- MARSH 5
- FISH AND WILDLIFE RESOURCES 6
  - *Essential Fish Habitat* 7
  - *Threatened and Endangered Species* 7
- WATER QUALITY 7
- CULTURAL RESOURCES 8
- RECREATIONAL RESOURCES 8
- AIR QUALITY 8

PROBLEMS, FORECASTED CONDITIONS, AND OPPORTUNITIES 8

FORMULATION, DESCRIPTION, AND COMPARISON OF ALTERNATIVES 9

- FORMULATION OF ALTERNATIVES 9
- DESCRIPTION OF ALTERNATIVES 11
  - *No Action Alternative* 11
  - *Bankline Stabilization Alternative* 11
- ENVIRONMENTAL EFFECTS AND COMPARISON OF ALTERNATIVES 12
  - *Marsh* 12
  - *Wildlife Resources* 12
  - *Essential Fish Habitat Assessment* 12
  - *Threatened and Endangered Species* 13
  - *Water Quality* 13
  - *Cultural Resources* 14
  - *Recreational Resources* 14
  - *Air Quality* 14
- RISK AND UNCERTAINTY 14
- RATIONALE FOR PLAN SELECTION 15

CONSULTATION AND PUBLIC PARTICIPATION 15

RECOMMENDED PLAN 15

- PURPOSE AND SUMMARY 15

PROPOSED MEASURES 15
PERMITS AND COMPLIANCE 17
COSTS, FINANCING, AND INSTALLATION 17
MONITORING AND OPERATION, MAINTENANCE, AND REHABILITATION 17

CONCLUSION 18

LIST OF PREPARERS 19

REFERENCES 20

APPENDICES 22

Tables

TABLE 1. ENVIRONMENTAL COMPLIANCE 17

Figures

FIGURE 1. PROJECT AREA VICINITY MAP. 4
FIGURE 2. PROJECT AREA 1953 AND 1990 10
FIGURE 3. PROJECT FEATURES MAP. 16

SUMMARY OF PROJECT PLAN/EA

Project Name: GIWW Bankline Restoration Project (TE-43)

Parish: Terrebonne

State: Louisiana

Federal Sponsor: U.S.D.A. Natural Resources Conservation Service

Non-federal Sponsor: Louisiana Department of Natural Resources

Description of Recommended Plan:

The proposed project consists of approximately 37,000 feet of bankline restoration adjacent to critically eroding portions of the southern bank of the GIWW in Terrebonne Parish, Louisiana.

Resource Information:

Size of Project	3,324 Acres
Land Ownership	
Private	100%
Habitat Types	
Fresh Marsh	1,728.5 Acres (52%)
Submerged Vegetation	269 Acres (8.09%)
Floating Vegetation	46 Acres (1.37%)
Bottomland Scrub/Shrub	63 Acres (1.91%)
Open Water	1,217.5 Acres (36%)

Threatened and Endangered Species

Currently, the only federally listed threatened and endangered species occurring in the project area are the American alligator (*Alligator mississippiensis*) and the bald eagle (*Halieaeetus leucocephalus*). Construction restrictions will be within the guidelines set forth by the U.S. Fish and Wildlife Service.

Essential Fish Habitat

The essential fish habitats that occur in the project area include estuarine emergent wetlands, submerged aquatic vegetation, mud, sand, shell and rock substrates, and estuarine water column.

Cultural Resources

There are no known cultural resources within the project area.

Problem Identification:

In the past 20 years, as the efficiency of the Lower Atchafalaya River has decreased, Lake Verret subbasin flooding and Atchafalaya River flows via the GIWW have increased. Deterioration of fresh and intermediate wetlands, particularly the floating marshes, in the upper Penchant basin has been attributed to sustained elevated water

levels. In addition, wave and resorb action from commercial and recreational traffic on the GIWW have caused floating marshes in some areas have become directly exposed to increased circulation through unnatural connections formed where channel banks have deteriorated. The project has experienced an interior marsh loss of 1,815 acres during the period between 1950 and 1990 and an average GIWW bankline loss of approximately 15 feet per year.

Alternative Plans Considered:

No Action
Bankline Protection

Project Objective:

To protect critically eroding portions of the southern bank of the GIWW that acts as an interface between the fragile fresh marshes and the flowing, turbulent water of the GIWW.

Principle Project Measures:

37,000 feet of bankline protection and stabilization.

Project Benefits:

Primary: Prevent the loss of 1,344 acres of interior marsh and bankline habitat.

Secondary: Improve wildlife habitat by enhancing emergent and floating fresh marsh.

Enable this portion of the GIWW to function as a conveyance channel to direct Atchafalaya freshwater flows further eastward.

Potential Adverse Impacts:

No long-term adverse impacts to wetlands, water quality, threatened and endangered species, species managed by the Gulf of Mexico Fishery Management Council or their essential habitat, other fish and wildlife resources, recreational or socio-economic or cultural resources are anticipated. However, the proposed project is located in an area known to be inhabited by nesting bald eagles (*Haliaeetus leucocephalus*), a federally listed threatened species. Bald eagles nest in Louisiana from October through mid-May. Because construction activities occurring within 3,000 feet of an active bald eagle nest during the nesting season could cause neast abandonment, those activities would be conducted during the non-nesting season. Accordingly, we have determined that the proposed project is not likely to adversely affect bald eagles. Construction activities will result in temporary loss of some non-motile benthic organisms and their habitat, as well as short-term water quality degradation, resulting from increased turbidity.

INTRODUCTION

The objective of the Gulf Intracoastal Waterway (GIWW) Bankline Restoration Project (TE-43) is to protect critically eroding portions of the southern bank of the GIWW that acts as an interface between the fragile fresh marshes and the turbulent insinuates high velocity which currently does not occur on a regular basis in the GIWW bankline. Proposed measures include installing shoreline protection structures along the southern bank of the GIWW. The entire project area is located within the Terrebonne Basin. The structures will be designed to provide protection of the banks of the GIWW which have experienced severe erosion since the construction of the GIWW in the early 1950's.

Federal funds to be used for planning and implementing projects which create, protect, restore, and enhance wetlands in coastal Louisiana are provided by the Coastal Wetlands Planning, Protection, and Restoration Act (CWPPRA) of 28 November 1990, House Document 646, 101st Congress. The Act calls for the formation of the Louisiana Coastal Wetlands Conservation and Restoration Task Force (LCWCRTF) to consist of the Secretary of the Army, the Administrator of the Environmental Protection Agency (EPA), the Governor of Louisiana, the Secretary of Interior, the Secretary of Agriculture, and the Secretary of Commerce. The Louisiana Department of Natural Resources (LDNR) typically serves as the local cost share partner for projects. GIWW Bankline Restoration Project (TE-43) is included on the Tenth Priority Project List approved by LCWCRTF (LCWCRTF 2000). Construction is authorized to begin as soon as all applicable regulatory and other legal requirements are met and the project design is finalized.

Under CWPPRA specifications, the project must be cost-shared between the federal sponsoring agency and the State of Louisiana. Pursuant to approval of the Louisiana Coastal Wetlands Conservation Plan, the federal government provides 85 percent of the project cost and the State of Louisiana contributes the remaining 15 percent. The United States Department of Agriculture (USDA), through the Natural Resources Conservation Service (NRCS), acts as the federal sponsor for this project, and the State of Louisiana, represented by LDNR has indicated its willingness to cost-share.

This Project Plan/Environmental Assessment (Plan/EA) has been prepared to fulfill the requirements of the National Environmental Policy Act of 1969 (NEPA). This Plan/EA describes problems affecting the area, significant resources, alternatives, the recommended alternative and its impacts, and public participation.

PROJECT SETTING

Location

The GIWW Bankline Restoration Project (TE-43) is located in Terrebonne Parish, Louisiana approximately ten miles east of the Lower Atchafalaya River and ten miles southwest of Houma, Louisiana (Figure 1). Land portions involved in the project include T18S, R15E, Section 1, T17S, R15E, Sections 60, 59, 58, 51, 52, 53, 44, 43, 42, and 33, T17S, R14E, Sections 12, 1, and 2. The specific location proposed for structure location is the southern bank of the GIWW originating at a point close to mile marker 80 and terminating at a point close to mile marker 73.

Climate

The climate in southern Louisiana is influenced by its subtropical latitude and its proximity to the Gulf of Mexico. The project area is characterized by long, hot, humid summers with

Figure 1. Project Area Vicinity Map

areas adjacent to the coast frequently being cooled by sea breezes. Average rainfall is 62 inches. Even though the rainfall is fairly evenly distributed throughout the year, it is heaviest from June through September.

Soils

The predominant soil that occurs along the existing bank line of the GIWW is Aquents, Dredged, occasionally flooded. For the remainder of the project area, Kenner muck – very frequently flooded, makes up the majority of the soil type. Other soil types present within the project area are Fausse Clay – freqently flooded, Barbary muck – frequently flooded, Gramercy/Cancienne – silty clay loam, and Allemands muck – very frequently flooded (NRCS 2002, unpublished data).

Marsh

The project area lies within a vast span of fresh floating marsh that was first described in the 1940's as substantial, highly productive flotant (Russell 1942; O'Neil 1949). The fresh floating marshes were formed in low mineral, deep organic deposits typically found in upper interdistributary basins. During peak delta lobe formation seaward, the formation of natural levees of the Mississippi River and its distributary channels cut off these basins from recurrent alluvial flows. As the interval between replenishing flooding events increased, subsequent maintenance of elevation or deposition in these low-energy conditions was almost exclusively by means of organic peat accumulation from vegetative biomass production. Following delta lobe abandonment by major river flows and decrease of the sustaining sediment supplies, shoaling occurred on the seaward edge of the basins and the underlying mineral substrate of the delta marshes began to subside.

While there is agreement on the setting in which floating marshes developed, opinions vary on the process and end result. O'Neil (1949) concluded that expansive marshes dominated by well-established colonies of maiden cane (*Panicum hemitomon*), with their substantial and buoyant root system, possessed attributes needed to detach intact from the mineral base and float en masse over deepening water and a subsiding clay pan. Russell (1942) contended that the first flotants formed after very long periods of basin filling when deep layers of organic ooze accumulated and water depths became shallow enough to permit invasion by water-tolerant plants extending from shorelines. In contrast, he believed the modern (late 1800's to present) flotant developed as a second phase that followed rapid formation of floating mats of invading water hyacinth *(Eichhornia crassipes*) and alligator weed (*Alternanthera philoxeroides*). He observed that the rank growth of these easily-broken "precursor" mats forms a soggy layer that is quickly colonized by other plant species on top while decomposing debris falls to the bottom of the underlying water column. He concluded that when a sufficient layer of accumulated organic ooze filled the space underneath the mat, the typical flotant species become established.

Characteristic differences between types of Louisiana's fresh floating marshes have long been recognized based on species composition, thickness and trafficability. Both O'Neil (1949) and Russell (1942) described areas of disruption in maiden cane flotant caused by herbivory, animal travel and storm events that resulted in fragmentation and formation of thinner, weaker floats dominated by cattail (*Typha sp.*), bulltongue (*Sagittaria lancifolia*) or wapato (*Sagittaria latifolia*). Only recently has a classification of Louisiana floating marsh types included a description of the intermittently floating thin-mat flotant that occupies the majority of the project area. In 1996, Sasser et al. classified floating marshes in the Mississippi River Deltaic Plain based on hydrologic (i.e. buoyancy) substrate characteristics, as well as vegetative composition. In this work, thin-mat flotant was distinguished by its

irregular periods of buoyancy and by the thinner profile of its mat that lacks a robust root system. The thin-mat habitat was found to exist as on small islands or continuous over many hectares.

Presently, the project marshes are composed mainly of fragile, variably floating thin-mat marshes, or fragmented, thin-mat islands interspersed with hyacinth rafts within large open water areas. The thin-mat marshes are dominated early in the growing season by dwarf spikerush (*Eleocharis parvula*) and later overtopped by fourchette (*Bidens laevis*), False loosestrife (*Ludwigia leptocarpa*), and frog fruit (*Phyla nodiflora*) (Sasser, et al., 1996). Vegetative data collected by Linscombe et al in July, 1997 for marsh type mapping showed deteriorating emergent areas of fresh marsh within the project boundaries were dominated by spikerush, with water pennywort (*Hydrocotyle rammunculatus*), jointvetch *(Aeschynomene virginica)* commonly occurring amongst water hyacinth or open water areas of hydrilla (*Hydrilla verticillata*) and water lily (*Nymphaea mexicana*).

NRCS field reconnaissance in September, 2001 found the interior project marshes to be composed of floating thin-mat dominated by fourchette and false loosestrife with a variety of species such as sensitive jointvetch, water pennywort, cyperus sp., cattail, cutgrass (*Zizaniopsis millicea*), bulltoungue, and spikerush also occurring. Mats were generally found to be broken islands heavily surrounded by water hyacinth rafts. The most common aquatic species recorded were southern naiad (*Najas quadalupensis*), salvinia (*Salvinia rotundifolia*), water celery (*Vallisneria americana*), water lettuce *(Pistia stratiotes)*, coontail (*Ceretophylum demersum*), and duck meal (*Lemna minor*). Also, emergent species such as bagscale (*Sacciolepis striata*), smartweed (*Polygonum punctatum*), wapato, water pennywort, fourchette and floating waterprimrose (*Ludwigia peploides*), were noted to be growing on water hyacinth rafts in some areas.

Fish and Wildlife Resources

Emergent marshes and marsh ponds in the project area provide habitats for numerous wildlife species including reptiles, amphibians, birds, and mammals. Depending upon seasonal changes, these habitats can provide food, cover, and reproductive needs during various stages of each species' life cycle. Waterfowl, furbearers, and alligators (*Alligator mississippiensis)* are some of the more economically important species.

Waterfowl utilize the fresh marshes of coastal Louisiana more than other habitats along the coast (Palmisano 1973, Chabreck et al. 1989). Gadwall (*Anas strepera*), northern pintail (*Anas acuta*), green-winged teal (*Anas crecca*), blue-winged teal (*Anas dicors*), and American widgeon (*Anas americana*) winter extensively in habitats found within the project area. Mottled ducks (*Anas fulvigula*) also utilize these areas for breeding during the summer months.

Woody scrub-shrub habitat in the project area provides an important habitat as a resting and refueling area for many neo-tropical migrant species. In addition, this habitat is known to support nesting colonies of wading birds in the area, however no current colonies are known within the project boundaries.

Fresh marshes support the highest densities of nutria (*Myocaşter coypus*) (Linscombe and Kinler 1984). Populations of nutria in the area are controlled through trapping. High populations of nutria can cause damage to marshes through herbivory, to the extent that marsh surfaces are denuded of vegetation and become susceptible to erosion.

The network of fishery habitats including fresh marsh, floating vegetation, submerged aquatic vegetation, mud, rock and sand and shell substrate and open water (both shallow

ponds and the GIWW) within this project area, provide important habitat for both commercially and recreationally important fisheries species. Largemouth bass (Micropterus *salmoides*), sunfish (*Lepomis spp.*), red drum (*Sciaenops ocellatus*) and catfish (*Ictalurus spp.*) are the more important recreational species. Important commercial species include the blue crab (*Callinetes sapidus*), gulf menhaden (*Brevoortia patronus*), brown shrimp (*Forfante penaeus aztecus*), white shrimp (*Litopeanaeus setiferus*) and striped mullet (*Mugil cephalus*). Other species such as the Atlantic croaker (*Micropogon undulatus*) use the area as a nursery ground and in turn, serve as prey for species such as red drum, mackerels, and snappers and highly migratory species such as billfishes and sharks.

Essential Fish Habitat

Estuarine emergent wetlands, submerged aquatic vegetation, mud, sand, and shell substrates and the estuarine water column are all contained within the project area and are defined as Essential Fish Habitat (EFH) under the Magnuson-Stevens Fishery Conservation and Management Act of 1996 (MSFCMA) which is managed by the Gulf of Mexico Fisheries Management Council (GMFMC). Fishery species covered under EFH that utilize this area include post larval and juvenile brown shrimp, white shrimp, and red drum. Species such as red drum, mackerels, and snappers that utilize prey species from the area are managed under the MSFCMA by GMFMC as the billfishes and sharks, are managed by National Marine Fisheries Service.

Threatened and Endangered Species

Currently, the only federally listed T&E species occurring in the project vicinity are the American alligator (*Alligator mississippiensis*) and the bald eagle (*Halieaeetus leucocephalus*). The American alligator is listed as Threatened under the Similarity of Appearance clause to the Endangered Species Act of 1973 (as amended). Population levels of alligators in the area are sufficient to legally allow a state regulated trapping season. The United States Department of the Interior, Fish and Wildlife Service (FWS) has identified three (3) bald eagle nesting sites presently within and in close proximity to the project area. The project area also encompasses an area where colonial nesting waterbird colonies may be present.

In order to protect nesting bald eagles, all work activities associated with the proposed bankline restoration alternative would be conducted outside of the bald eagle nesting season.

Water Quality

Since the project is in close proximity and directly linked to the Atchafalaya River, the quality of the water within the GIWW and the project area is predominantly influenced by this stream. The waters of the GIWW along the project length are most times quite turbid and contain suspended soil material. In contrast, the water, which is found within the interior of the project areas, located at relatively short distances from the course of the GIWW, is very clear and, during particular seasons, is sometimes stained by tannins. Turbid water reaches into the interior of the project through openings along the existing bankline of the GIWW. Sapric material, mostly the remains of plant parts is re-suspended in the water column when moderate water velocities impact the interior of the area. This occurs mainly when heavily laden barges travel past the project area within the GIWW or when large marine vessels pass at a high rate of speed.

Cultural Resources

No known archaeologic or culturally important sites or properties will be affected by this project. There are no known cultural resources within the project area. Also, coordination with local Native American Tribes who may have an interest in this project has been performed.

Recreational Resources

The project area supports various recreational opportunities such as small game and waterfowl hunting, freshwater fishing, and nature observation.

Air Quality

As required by LAC 33:111.1405B of the Louisiana Department of Environmental Quality Air regulations, an applicability determination was made for current conditions and for the separate items of the proposed project. The applicability determination was based upon direct emissions. Indirect emissions were not considered, since no other Federal actions such as licensing or subsequent actions relating to construction are anticipated from this project. It was assumed that if any indirect emissions would occur they would be negligible.

PROBLEMS, FORECASTED CONDITIONS, AND OPPORTUNITIES

In the past 20 years, pro-delta formation at the outlet of the Lower Atchafalaya River has resulted in decreased discharge flow rates, resulting in Lake Verrett subbasin flooding and increased Atchafalaya flows to the GIWW. Deterioration of fresh and intermediate wetlands, particularly of the floating marshes in the upper Penchant Basin, has been attributed to sustained elevated water levels caused by this changing flow pattern. In addition, floating marshes in some areas have become directly exposed to increased circulation through unnatural connections formed where channel banks have deteriorated. Landowners in the upper Penchant Basin can testify that increased flow of the GIWW and wave pulses from navigation traffic cause additional breakup and loss of floating marshes in unprotected areas (CWPPRA Environmental Work Group 2000). There is a need to protect critically eroding portions of the southern bank of the GIWW that acts as an interface between the fragile fresh marshes and the GIWW.

The original channel of the GIWW was dredged in the early 1950's and as-built drawings of segments occurring in the project area show it to have a constructed top width of approximately 250 feet. This width has doubled to 500 feet at most areas and over 1,000 feet in others, due to erosion. Also, spoil disposal resulting from dredging was placed on the northern edge of the constructed channel. The project area is situated approximately 10 miles east of the Lower Atchafalaya River. This portion of the GIWW is connected to the Atchafalaya River via Bayous Chene and Cocodrie. Through this connection, seasonal flow rates and velocities of the GIWW within the project boundaries are influenced. Commercial marine vessels utilize the GIWW. The type and size of these craft impact the existing GIWW bank and surrounding marshes in different ways. Relatively fast moving, offshore supply boats produce a boat wake that is sometimes four to five feet high. As the energy of the wake impacts the shoreline, unprotected soil is eroded leading to continual shore regression. Large trees are uprooted due to the supporting soil being washed from the roots. The common mode of barge transportation in this area is for large tugboats to push either single or multiple barges (lashed side to side) down the GIWW. Fully loaded barges displace approximately six to eight feet of water. This displacement creates a hydrologic function much like a plunger being pushed or pulled through a syringe. This resorb effect pulls on the

water within the smaller waterways and canals which bisect the GIWW. This in turn, transmits a high level of turbulence to fragile, highly-organic fresh and floating marshes. This effect is so severe it actually "tears" a portion of the floating marsh away. This material is then suspended and carried away via the GIWW or other streams or canals within the area. This condition has created large areas of open water within the project area over a relatively short period of time (Figure 2).

Sasser et al. (1994) found thin-mat habitat in locations previously mapped as thick mat flotant by O'Neil (1949). It is not known if thin mat is a remnant of a degrading thick-mat habitat or an initial transitional phase in the development of thick mat from open water habitat. Russell (1942) purported that all flotant was a transformation phase in the process of creation of firm marsh and that "in the end it will be dry land." Nonetheless, it is notable that Visser et. al. (1999) reported paille fine dominated marsh decreased from 67% to 19% of the fresh and oligohaline marshes between 1968 and 1992, while the incidence of spikerush dominated thin-mat marsh increased by almost the same amount – 3% to 53% - during the same period.

Breaches and loss of long sections in the GIWW spoilbank adjacent to floating marshes provide unnatural water exchange points that are of particular concern for several reasons. Thin-mat flotant is only half as thick as other flotant types and has less bulk density, therefore sediment accumulation on the mat could potentially cause permanent submergence (Sasser et al. 1994). Because thin-mat flotant can remain submerged for long periods of time, mats exposed to the highly sediment laden Atchafalaya River flows in the GIWW may have an increased risk of grounding (adherence of floating marsh to substratum). Deterioration of fresh and intermediate wetlands, and particularly the floating marshes in this area, has been attributed to sustained elevated water levels caused by increased Atchafalaya River flows in the GIWW (CWPPRA Environmental Work Group 2000).

In addition, direct wave impact or the abrupt rise and fall of water elevation from passage of the GIWW marine traffic as earlier described can cause tearing and fragmentation of the fragile thin-mat flotant. The spoilbank breaches also provide avenues for increased water flow to erode and export vulnerable organic material from under floating mats (Gagliano & Wicker 1988), and to cause fragmented islands to drift out of the system.

Conversely, there is concern that continuous spoilbank construction can cause impoundment inhibiting water exchange and sediment delivery underneath the mats (Swenson 1987; Sasser 1994). If that occurs, the result may be a deficit in nutrient subsidy that may be necessary for maintenance or biomass production of all of the mat types. The proposed project will have openings which will preclude a continuous spoilbank.

FORMULATION, DESCRIPTION, AND COMPARISON OF ALTERNATIVES

Formulation of Alternatives

A discussion concerning the various types of structures that could be constructed to achieve project goals, was held by the various planning entities of the project. It was mutually agreed that some type of energy absorbing barrier just off-shore of the bankline would satisfy the need to intercept boat wake energy before it reached the existing shoreline. The final type of structure that will be constructed will depend on various factors such as weight-bearing potential of existing soil strata, final alignment of the structure, construction factors (flotation canals, reach of equipment, etc.) and costs. These questions will be answered after further data is gathered and analyzed during the design phase of the project planning sequence.

Figure 2. Project Area 1953 and 1990.

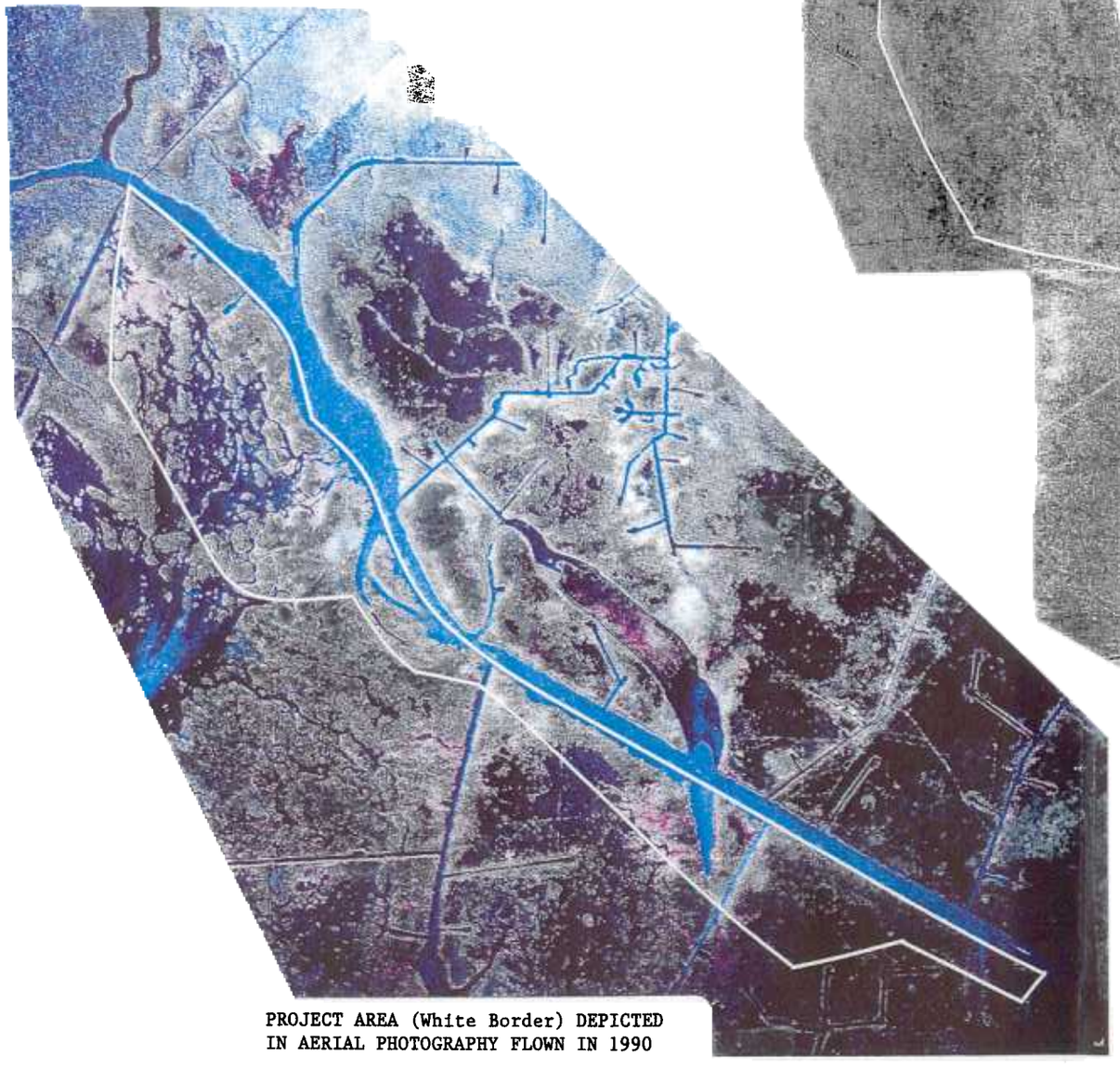

PROJECT AREA (White Border) DEPICTED
IN AERIAL PHOTOGRAPHY FLOWN IN 1990

SOURCE: USDA-NRCS

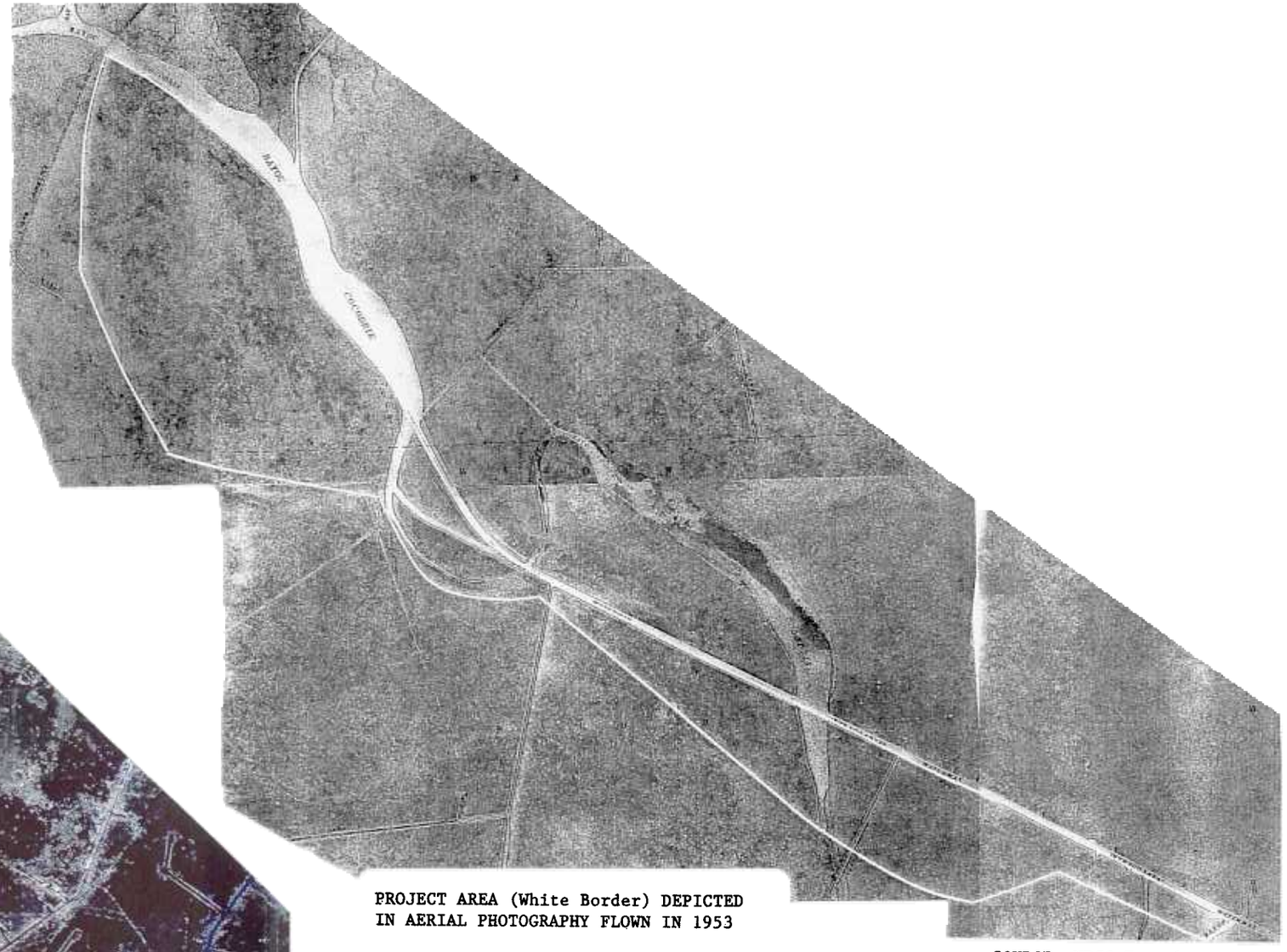

PROJECT AREA (White Border) DEPICTED
IN AERIAL PHOTOGRAPHY FLOWN IN 1953

SOURCE: NRCS Terrebonne
Soil Survey, August
1956.

Description of Alternatives

No Action Alternative

The No Action Alternative consists of no treatment for the project area. No structural or non-structural measures would be planned beyond those already in existence.

Bankline Restoration Alternative

The Bankline Restoration Alternative is the most effective means of protecting or restoring bank line functions within the project area. Most segments of the bankline have no remnant spoil from initial GIWW construction and interior fragile marshes are directly exposed to wave action from marine traffic. The soils adjacent to the GIWW within the project area are highly organic at the surface with very fluid clay substrates which contribute to its fragile, less-supportive capabilities. Traditional bankline protection techniques cannot be used due to high costs associated with initial volume requirements and long term maintenance needs predicated by subsurface soil conditions. NRCS is currently evaluating various types of shoreline protection measures constructed on similar soil conditions for a CWPPRA project in Jefferson and Lafourche Parishes. The project, Barataria Landbridge Shoreline Protection – (BA-27a), was completed in July 2001 and the various installed measures are currently under performance evaluation. The results of this project, along with other similar projects, will be referred to and analyzed for their merit in the construction of GIWW Bankline Restoration when the project enters the design phase of work. Design surveys and a geo-technical analysis will be utilized during the design phase and are critical in determining the final protection component.

Presently, there are two basic types of bankline restoration measures being considered. These include: (1) a foreshore armored dike with lightweight core material and geotextile support and (2) vertical panels constructed out of vinyl, pvc, steel, or concrete material with lateral supporting members (Appendix B). Data gathered from geotechnical investigations and detailed bathymetric surveys, and the results of similar projects, will be analyzed during the design phase of the project to determine which type of structure is most applicable and cost effective for this project's specific needs. Other desirable wave dampening structures may be discovered during the design process and used in place of the above proposed alternatives.

Restoration of the bankline will commence at the western end of the project boundary and terminate approximately 37,000 feet to the east. Structure alignment will be foreshore of the southern bank of the GIWW. Openings will be incorporated into the structure at the intersections of natural streams, bayous, and canals. Bankline protection will be wrapped around the corners of these openings for a sufficient distance to ensure that erosion protection from wakes of marine traffic is continued. The structure will also tie-in with existing structures, such as those found at pipeline crossings.

An exception to incorporating an opening in the structure at inlets, is at the eastern connection of Bayou Cocodrie and the GIWW. The closing of this connection will reduce the flow through this area from the GIWW and therefore protect the existing bank line. The western connection of Bayou Cocodrie and the GIWW will remain open providing boat and fisheries access to all adjacent affected areas.

Environmental Effects and Comparison of Alternatives

Marsh

No Action Alternative

With the No Action Alternative, the existing GIWW bankline in the project area will continue to degrade and the number and size of breaches between the waterway and interior marsh areas will continue to increase. Break-up and loss of the adjacent floating marshes will persist in the face of accelerating flows and increased water exchange, resulting in formation of large, coalescing open water areas. These areas will likely deepen as wave energy from extended fetch lengths and higher water flow associated with increasing connection with the GIWW causes detachment and export of organic substrate material. Turbidity will also escalate as a result creating conditions less conducive for the growth of aquatic vegetation. The low energy environment believed necessary for the longevity of the floating marsh habitat will not be achieved.

Bankline Restoration Alternative

The Bankline Stabilization Alternative will protect the existing bank line, close both of the breaches and degraded sections in the GIWW spoilbank therefore, reducing the cross-sectional area available for water exchange between the GIWW and adjacent marshes. Limiting the points of water flow and reducing water velocities between the GIWW and project area will decrease detachment, suspension and export of organic material from the marsh substrate, and reduce break-up and loss of the marsh. The placement of this structure will not create an impoundment area due to the many canal openings that will remain open.

Wildlife Resources

No Action Alternative

With the No Action Alternative, continued degradation and loss of emergent wetlands will directly affect wildlife populations in the project area in an adverse manner. The decline in productivity of the area for various species of wildlife will likely continue, until a great portion of emergent fresh marsh and flotant has been lost. Continued deterioration of woody shrub habitat will result in loss of this important resting and refueling area for migratory neo-tropical species.

Bankline Restoration Alternative

With the Bankline Stabilization Alternative, it is anticipated that the loss of emergent fresh marsh and flotant will be reduced, thus, the project area will continue to provide suitable habitat for a wide range of wildlife species. Protection of woody vegetation will insure the availability of important neo-tropical habitat, which is important during both spring and fall migration.

Essential Fish Habitat Assessment

No Action Alternative

The No Action Alternative would result in the continual loss of elevated banks along the GIWW along with increased erosion of emergent fresh marshes. EFH would be reduced by the loss of estuarine emergent wetlands and submerged aquatic vegetation.

Bankline Restoration Alternative

In consideration of the location of construction activities and the installation of the Bankline Stabilization Alternative, there will be a temporary impact to the EFH category of "estuarine water column" by an increase in the turbidity of the water during construction. The "foot print" of the bankline protection structures will have a permanent impact to the EFH category of "mud, sand, shell and rock substrates". Also, construction impacts may potentially result in the loss of benthic organisms. These adverse impacts would be offset by protection 1,344 acres of intertidal wetlands and should improve fisheries habitat by enhancing emergent and floating fresh marsh. EFH will also be improved due to the addition of rock substrate that will provide increased areas for cover and feeding of fisheries. In addition, the reduction of erosion rates in the adjacent fresh marshes will provide estuarine habitat for juvenile organisms. Therefore, the proposed action of this project is anticipated to have minimal adverse impacts. The net, long term project impacts to EFH would be beneficial to the Federally-managed fisheries of coastal Louisiana.

Threatened and Endangered Species

No Action Alternative

The No Action Alternative will allow for continued erosion of the existing bankline resulting in further fresh marsh loss which serves as habitat for many predatory birds such as the bald eagle and the American alligator.

Bankline Restoration Alternative

The Bankline Stabilization Alternative will preserve existing habitat for threatened and endangered species by preventing bank line erosion and emergent fresh marsh loss.

Water Quality

No Action Alternative

The No Action Alternative will not change or alter the quality and condition of water found in the GIWW. Existing breaches and gaps along the existing shoreline of the GIWW will allow for increased water exchange within the interior of the project area. Increased water velocities will continue to aggravate fresh marsh loss by loosening and eventually transporting organic material and clumps of flotant marsh populated by emergent marsh species out of their present locations. This will be a permanent loss and will create more open water areas. Growth of Submerged Aquatic Vegetation (SAV) will be lessened due to reduced clarity of the water within the interior of the project.

Bankline Restoration Alternative

The quality and condition of water found in the GIWW will not be changed or altered by the Bankline Stabilization Alternative. By placing a structure along the existing shoreline of the GIWW, the interchange of turbid water with that of the project interior area will be minimized. Sapric material lying at the water bottoms of interior marshes will not be disturbed and will be allowed to accumulate.

Cultural Resources

No Action Alternative

The future without project conditions for cultural resources would be expected to remain similar to existing conditions.

Bankline Restoration Alternative

Since there are no known cultural resources within the project area, the Bankline Stabilization Alternative is not anticipated to have any significant impacts. If any archaeologic or cultural resources are discovered during the project planning/construction process, the proper steps will be taken to ensure protection of the site.

Recreational Resources

No Action Alternative

The No Action Alternative would result in a decline of recreational resources, specifically fishing and waterfowl hunting.

Bankline Restoration Alternative

Recreational resources will be improved with the implementation of the Bankline Stabilization Alternative. By eliminating the turbidity and its associated reduction of water clarity within the project area, SAV production will increase including especially important species preferred by various waterfowl such as coontail (*Ceratophyllum demersum*) and water celery (*Vallisneria americana*).

Air Quality

No Action Alternative

The No Action Alternative will result in no impacts to air quality remaining the same.

Bankline Restoration Alternative

The Bankline Stabilization Alternative will not have any long-term adverse impacts on present conditions, but could have short-term, negative impacts during construction. The analysis for total direct emissions was based upon the estimated (construction) hours and subsequent equipment horsepower output expected for this project. Categories of emissions from nitrogen oxides (NO_x) and volatile organic compounds (VOC's) were evaluated. The total tons of VOC emissions for this project were calculated to be 0.09 tons, which is significantly lower than the threshold limit applicable to VOC's for parishes where the most stringent requirement (50 tons per year) is in effect. Based on this applicability determination, the emissions for this project are classified as *de minimus* and no further action is required.

Risk and Uncertainty

Past projects involving various types of bankline protection/stabilization along the GIWW in several coastal parishes have generally satisfied the overall specific project goals. However, due to the fact that coastal areas are not static, and no predictions can be made about weather

conditions that may affect them, implementing a project such as this one has inherent risks. The organic nature of the soils pose a risk for long-term stability of a structure. During the planning and engineering and design phase of this project, steps will be taken to minimize risk and uncertainty, where possible.

Rationale for Plan Selection

The selected plan results from the consensus of a local, state, federal, and academic work group; a recommendation of the CWPPRA Environmental and Engineering Workgroup; review of available information; expertise of personnel involved in coastal wetlands planning, engineering, and construction; public comments; and consideration of potential impacts of alternatives. This plan addresses the most critical needs of the project area while striving to minimize adverse impacts. The proposed project, constructing bankline stabilization structures, is not anticipated to cause any long-term, significant, adverse environmental impacts.

CONSULTATION AND PUBLIC PARTICIPATION

During project planning, coordination has been maintained with the following agencies and entities: U.S. Fish and Wildlife Service, National Marine Fisheries Service, Environmental Protection Agency, U.S. Army Corps of Engineers, Louisiana Department of Natural Resources, Louisiana Governor's Office for Coastal Activities, and the Lafourche-Terrebonne Soil and Water Conservation District. This project also supports regional strategies that were identified with the Coast 2050 plan which was developed with local input. This project supports a broader objective of enabling the GIWW to act as a conveyance channel to shunt Atchafalaya water further east while subsequently providing some relief to the marshes of west Terrebonne which suffer from elevated water levels.

Project development and selection under the CWPPRA process utilizes input from the public, in addition to local, state, and federal agency input. Public involvement in CWPPRA is achieved through the Citizen Participation Group and annual public meetings conducted during project development and selection stages. Landowners in the project area are in full support of this project.

RECOMMENDED PLAN

Purpose and Summary

The primary objective of this project is to reduce the ongoing erosion of the GIWW bankline in the project area. The Bankline Stabilization Alternative, construction of a structure along the bankline, is the preferred alternative. Project measures and their locations are shown in Figure 3.

Proposed Measures

The proposed project consists of 37,000 feet of bankline restoration and protection along the foreshore of the southern bank of the GIWW. The types of structures currently considered during the planning phase of the project are: (1) a foreshore armored dike with lightweight core material and geotextile support and (2) vertical panels constructed out of vinyl, pvc, steel or concrete material with lateral supporting members (Appendix B). Openings will be

Figure 3. Project Features Map.

left where the structure encounters most natural streams and bayous, navigable canals, and oil-field location canals occurring on privately owned lands. Bankline protection measures will be wrapped around the corners of these openings for a sufficient distance to ensure continued erosion protection from wakes of marine traffic is continued. The structure will also tie-in with smaller, existing structures, such as those found at pipeline crossings.

Permits and Compliance

All necessary permits and approvals will be obtained before project construction commences. Project implementation will be in compliance with applicable federal statutes as shown in Table 1. The proposed action is not expected to cause adverse environmental impacts requiring environmental mitigation.

Table 1. Environmental Compliance

STATUTE	COMPLIANCE
Archaeological and Historic Preservation Act	Full
Clean Air Act, as amended	Full
Coastal Barrier Resources Act (PL 97-348; 1982)	Full
Coastal Zone Management Act of 1972, as amended	Full*
Endangered Species Act of 1973, as amended	Full
Executive Order 11988, Floodplain Management	Full
Executive Order 11990, Protection of Wetlands	Full
Farmland Protection Policy Act	Full
Federal Water Pollution Control Act	Full*
National Environmental Policy Act of 1969, as amended	Full*
National Historic Preservation Act of 1966, as amended	Full
Magnuson-Stevens Fishery Conservation and Management Act	Full
Subtitle B, Highly Erodible Land Conservation, and Subtitle C, Wetland Conservation, of the Food Security Act of 1985	Full
Wild and Scenic River Act, as amended	Full

* Full compliance and applicable documentation will be completed prior to construction.

Costs, Financing, and Installation

Total project cost was estimated and includes all aspects of planning, engineering, administration, landrights acquisition, construction, inspection, monitoring, and operations and maintenance. Cost information is provided in Appendix A.

Monitoring and Operation, Maintenance, and Rehabilitation

This project has funding for monitoring and operation and maintenance. This funding will continue for the 20-year life of the project. These tasks will be administered by LDNR in coordination with NRCS. Costs for these items are listed in Appendix A.

CONCLUSION

The United States Department of Agriculture, Natural Resources Conservation Service finds no significant long-term adverse impacts to wetlands, water quality, threatened or endangered species, essential fish habitat, other fish and wildlife resources, recreational or socio-economic resources, or cultural resources associated with the GIWW Bankline Restoration Project (TE-43). Project implementation is expected to prevent the loss of 1,344 acres of interior marsh and shoreline habitat and improve wildlife habitat by enhancing emergent and floating fresh marsh. The project will produce net long-term benefits to project area resources.

LIST OF PREPARERS

Name	Present Position	Employer
Michael D. Tullos	Soil Conservationist	Natural Resources Conservation Service
Cynthia S. Steyer	Soil Conservationist	Natural Resources Conservation Service
Loland J. Broussard	Civil Engineer	Natural Resources Conservation Service
Ronald D. Faulkner	Civil Engineer	Natural Resources Conservation Service
Adele Swearingen	Office Automation Asst.	Natural Resources Conservation Service

REFERENCES

Chabreck, R. H., T. Joanen, and S. L. Paulus. 1989. Southern coastal marshes and lakes. Pages 249-277, in L. M. Smith et al., eds. Habitat Management for Migrating And Wintering Waterfowl in North America. Texas Tech University Press, Lubbock. 560 pp.

Coastal Wetlands Planning, Protection, and Restoration Act Environmental Work Group. GIWW Bank Restoration of Critical Areas in Terrebonne Parish. Candidate Project Information Sheet for WVA Analysis. 9pp.

Gagliano, S.M. and Wicker, K.M. 1989. Processes of Wetland Erosion in the Mississippi River Deltaic Plain. In: Duffy, W. G. and Clark D. (eds.) Marsh Management in Coastal Louisiana: Effects and Issues – Proceedings of a Symposium, pps. 28-48. Baton Rouge, LA U.S. Fish and Wildlife Service and Louisiana Department of Natural Resources.

Linscombe, G., and N. Kinler. 1984. Fur harvest distribution in coastal Louisiana Pages 187-199, in C.F. Bryan et al., eds. Proceedings of the 4th Coastal Marsh Estuary Management Symposium. Louisiana State University, Baton Rouge. 241 pp.

Linscombe, G., R.H. Chabreck, S. Hartley, J.B. Johnston, and A. Martucci. 1997. Louisiana Coastal Marsh Vegetative Types. LA Department of Wildlife and Fisheries. GIS CD. June 1, 2000 draft.

Louisiana Coastal Wetlands Conservation and Restoration Task Force. September 2000. Tenth Priority Project List Report.

Natural Resources Conservation Service. 2002. Unpublished soil survey data for Terrebonne Parish, Louisiana.

O'Neil, T. 1949. The Muskrat in the Louisiana Coastal Marshes. LA Department of Wildlife and Fisheries, New Orleans. 152pp.

Palmisano, A. W. 1973 Habitat preference of waterfowl and fur animals in the northern Gulf Coast marshes. Pages 163-190, in R.H. Chabreck, ed. Proceedings of the 2nd Coastal Marsh and Estuary Management Symposium. Louisiana State University, Baton Rouge. 316 pp.

Russell. 1942. Flotant. Geographical Review 32:74-98.

Sasser, C.E., J.G. Gosselink, E.M. Swenson, & D. Elaine Evers. 1994. Hydrologic, Vegetation, and Substrate Characteristics of Floating Marshes in Sediment-rich Wetlands of the Mississippi River Delta Plain, Louisiana. In: Sasser, C.E. 1994. Vegetation Dynamics in Relation to Nutrients in Floating Marshes in Louisiana, USA, pp.49-77. Louisiana State University, Baton Rouge, LA.

Sasser, C.E., J. G. Gosselink, E. M. Swenson, C.M. Swarzenski, and N. C. Leibowitz. 1996. Vegetation, Substrate, and Hydrology in Floating Marshes in the Mississippi River Delta Plain Wetlands, USA. Vegetation 122: 129-142.

Soil Conservation Service, Soil Survey of Terrebonne Parish, Series, 1956, No. 1, 140 pp. plus maps.

Swenson, E. M., 1987. Spoil banks: Effects on a Coastal Marsh Water level Regime. Estuarine, Coastal and Shelf Science 24: 599-609.

Visser, J. M., C. E. Sasser, R. A. Chabreck, and R. G. Linscombe. 1999. Long-term Vegetation Change in Louisiana Tidal Marshes, 1968-1992. Wetlands 19: 168-175.

APPENDICES

APPENDIX A
COST INFORMATION

Coastal Wetlands Conservation and Restoration Plan Priority Project List X

GIWW Bank Restoration of Critical Areas in Terrebonne

Project Construction Years:	4	Total Project Years	24
Interest Rate	6.375%	Amortization Factor	0.0898573
Total First Costs	$17,478,000	Total Fully Funded Costs	$19,657,900

Annual Charges	Present Worth	Average Annual
First Costs	$17,158,164	$1,541,786
Monitoring	$30,022	$2,698
O & M Costs	$744,266	$66,878
Other Costs	$7,167	$644
Total	$17,939,600	$1,612,000
Average Annual Habitat Units		183
Cost Per Habitat Unit		$8,809
Total Net Acres		366

All dates are in Federal Fiscal Years (October 1 to September 30)

December 12, 2000

Coastal Wetlands Conservation and Restoration Plan

GIWW Bank Restoration of Critical Areas in Terrebonne

Project Costs

Year	Fiscal Year	E&D	Land Rights	Federal S&A	LDNR S&A	Corps Proj. Man.	Monitoring	S&I	Contingency	Construction Costs	Total First Cost
Phase I											
3 Compound	2001	$463,750	$21,875	$119,219	$111,296	$644	$11,632	-	$0		$728,416
2 Compound	2002	$596,250	$28,125	$153,281	$143,094	$644	$2,770	-	$0		$924,165
1 Compound	2003	$0	$0	$0	$0	$0	$0	-	$0		$0
0 Compound	2004	$0	$0	$0	$0	$0	$0	-	$0		$0
	TOTAL	$1,060,000	$50,000	$272,500	$254,390	$1,288	$14,402	$0	$0	$0	$1,652,580
Phase II											
0 Compound		-	-	-	-	-	-	-	$0	$0	$0
3 Compound	2001	-	-	$0	$0	$0	-	$0	$0	$0	$0
2 Compound	2002	-	-	$0	$0	$0	-	$0	$0	$0	$0
1 Compound	2003	-	-	$272,500	$254,390	$644	$2,770	$166,000	$2,725,250	$10,901,000	$14,322,554
	TOTAL	$0	$0	$272,500	$254,390	$0	$2,770	$166,000	$2,725,250	$10,901,000	$14,322,554
Total First Costs		$1,060,000	$50,000	$545,000	$508,780	$1,288	$17,172	$166,000	$2,725,250	$10,901,000	$15,975,135

Year	FY	Monitoring	O&M	Corps PM	Other
1 Discount	2004	$2,770	$3,546	$644	-
2 Discount	2005	$2,770	$3,546	$644	-
3 Discount	2006	$2,770	$3,546	$644	-
4 Discount	2007	$2,770	$3,546	$644	-
5 Discount	2008	$2,770	$3,546	$644	-
6 Discount	2009	$2,770	$3,546	$644	-
7 Discount	2010	$2,770	$3,546	$644	-
8 Discount	2011	$2,770	$3,546	$644	-
9 Discount	2012	$2,770	$3,546	$644	-
10 Discount	2013	$2,770	$1,311,113	$644	-
11 Discount	2014	$2,770	$3,546	$644	-
12 Discount	2015	$2,770	$3,546	$644	-
13 Discount	2016	$2,770	$3,546	$644	-
14 Discount	2017	$2,770	$3,546	$644	-
15 Discount	2018	$2,770	$3,546	$644	-
16 Discount	2019	$2,770	$3,546	$644	-
17 Discount	2020	$2,770	$3,546	$644	-
18 Discount	2021	$2,770	$3,546	$644	-
19 Discount	2022	$2,770	$3,546	$644	-
20 Discount	2023	$0	$3,546	$644	-
	Total	$52,630	$1,378,487	$12,880	$0

All dates are in Federal Fiscal Years (October 1 to September 30)

Coastal Wetlands Conservation and Restoration Plan

GIWW Bank Restoration of Critical Areas in Terrebonne

Present Valued Costs Total Discounted Costs $17,939,619 Amortized Costs $1,612,006

Year		Fiscal Year	E&D	Land Rights	Federal S&A	LDNR S&A	Corps Proj. Man.	Monitoring	S&I	Contingency	Construction Costs	Total First Cost
Phase I												
3	1.204	2001	$558,216	$26,331	$143,504	$133,967	$775	$14,001	$0	$0	$0	$876,795
2	1.132	2002	$674,695	$31,825	$173,448	$161,920	$729	$3,134	$0	$0	$0	$1,045,752
1	1.064	2003	$0	$0	$0	$0	$0	$0	$0	$0	$0	$0
0	1.000	2004	$0	$0	$0	$0	$0	$0	$0	$0	$0	$0
		Total	$1,232,912	$58,156	$316,951	$295,887	$1,504	$17,136	$0	$0	$0	$1,922,546
Phase II												
0	1.000	0	$0	$0	$0	$0	$0	$0	$0	$0	$0	$0
3	1.204	2001	$0	$0	$0	$0	$0	$0	$0	$0	$0	$0
2	1.132	2002	$0	$0	$0	$0	$0	$0	$0	$0	$0	$0
1	1.064	2003	$0	$0	$289,872	$270,607	$685	$2,947	$176,583	$2,898,985	$11,595,939	$15,235,617
		Total	$0	$0	$289,872	$270,607	$685	$2,947	$176,583	$2,898,985	$11,595,939	$15,235,617
Total First Cost			$1,232,912	$58,156	$606,823	$566,495	$2,190	$20,082	$176,583	$2,898,985	$11,595,939	$17,158,164

Year		FY	Monitoring	O&M	Corps PM	Other
-1	0.940	2004	$2,604	$3,333	$605	
-2	0.884	2005	$2,448	$3,134	$569	
-3	0.831	2006	$2,301	$2,946	$535	
-4	0.781	2007	$2,163	$2,769	$503	
-5	0.734	2008	$2,034	$2,603	$473	
-6	0.690	2009	$1,912	$2,447	$444	
-7	0.649	2010	$1,797	$2,301	$418	
-8	0.610	2011	$1,690	$2,163	$393	
-9	0.573	2012	$1,588	$2,033	$369	
-10	0.539	2013	$1,493	$706,715	$347	
-11	0.507	2014	$1,404	$1,797	$326	
-12	0.476	2015	$1,319	$1,689	$307	
-13	0.448	2016	$1,240	$1,588	$288	
-14	0.421	2017	$1,166	$1,493	$271	
-15	0.396	2018	$1,096	$1,403	$255	
-16	0.372	2019	$1,030	$1,319	$240	
-17	0.350	2020	$969	$1,240	$225	
-18	0.329	2021	$911	$1,166	$212	
-19	0.309	2022	$856	$1,096	$199	
-20	0.291	2023	$0	$1,030	$187	
		Total	$30,022	$744,266	$7,167	$0

All dates are in Federal Fiscal Years (October 1 to September 30)

Coastal Wetlands Conservation and Restoration Plan

GIWW Bank Restoration of Critical Areas in Terrebonne

Fully Funded Costs Total Fully Funded Costs $19,657,900 Amortized Costs $1,766,406

Year		Fiscal Year	E&D	Land Rights	Federal S&A	LDNR S&A	Corps Proj. Man.	Monitoring	S&I	Contingency	Construction Costs	Total First Cost
Phase I												
3	1.032	2001	$478,590	$22,575	$123,034	$114,857	$665	$12,004	$0	$0	$0	$751,725
2	1.065	2002	$635,021	$29,954	$163,248	$152,399	$686	$2,950	$0	$0	$0	$984,258
1	1.099	2003	$0	$0	$0	$0	$0	$0	$0	$0	$0	$0
0	1.134	2004	$0	$0	$0	$0	$0	$0	$0	$0	$0	$0
		TOTAL	$1,113,611	$52,529	$286,282	$267,256	$1,351	$14,954	$0	$0	$0	$1,735,983
Phase II												
0	0.000	0	$0	$0	$0	$0	$0	$0	$0	$0	$0	$0
3	1.032	2001	$0	$0	$0	$0	$0	$0	$0	$0	$0	$0
2	1.065	2002	$0	$0	$0	$0	$0	$0	$0	$0	$0	$0
1	1.099	2003	$0	$0	$299,506	$279,601	$708	$3,045	$182,451	$2,995,335	$11,981,341	$15,741,988
		TOTAL	$0	$0	$299,506	$279,601	$708	$3,045	$182,451	$2,995,335	$11,981,341	$15,741,988
Total First Cost			$1,113,600	$52,500	$585,800	$546,900	$2,100	$18,000	$182,500	$2,995,300	$11,981,300	$17,478,000

Year		FY	Monitoring	O&M	Corps PM	Other
-1	1.134	2004	$3,142	$4,022	$730	
-2	1.171	2005	$3,242	$4,151	$754	
-3	1.208	2006	$3,346	$4,284	$778	
-4	1.247	2007	$3,453	$4,421	$803	
-5	1.287	2008	$3,564	$4,562	$829	
-6	1.328	2009	$3,678	$4,708	$855	
-7	1.370	2010	$3,796	$4,859	$882	
-8	1.414	2011	$3,917	$5,014	$911	
-9	1.459	2012	$4,042	$5,175	$940	
-10	1.506	2013	$4,172	$1,974,586	$970	
-11	1.554	2014	$4,305	$5,511	$1,001	
-12	1.604	2015	$4,443	$5,688	$1,033	
-13	1.655	2016	$4,585	$5,870	$1,066	
-14	1.708	2017	$4,732	$6,058	$1,100	
-15	1.763	2018	$4,883	$6,251	$1,135	
-16	1.819	2019	$5,040	$6,451	$1,172	
-17	1.878	2020	$5,201	$6,658	$1,209	
-18	1.938	2021	$5,367	$6,871	$1,248	
-19	2.000	2022	$5,539	$7,091	$1,288	
-20	2.064	2023	$0	$7,318	$1,329	
		Total	$80,400	$2,079,500	$20,000	$0

All dates are in Federal Fiscal Years (October 1 to September 30)

E&D and Construction Data

ESTIMATED CONSTRUCTION COST	10,901,000
ESTIMATED CONSTRUCTION + 25% CONTINGENCY	13,626,000

TOTAL ESTIMATED PROJECT COSTS

PHASE I

Federal Costs			
Engineering and Design			$1,060,000
Engineering	$816,000		
Geotechnical Investigation	$150,000		
Surveying	$54,000		
Hydrologic Modeling	$0		
Data Collection	$0		
Cultural Resources	$10,000		
NEPA Compliance	$30,000		
Supervision and Administration			$272,500
State Costs			
Supervision and Administration			$254,390
Easements and Land Rights			$50,000
Monitoring			$14,402
Monitoring Plan Developmen	$11,632		
Monitoring Protocal Cost *	$2,770		
Total Phase I Cost Estimate			**$1,651,000**

* *Monitoring Protocol requires a minimum of one year pre-construction monitoring at a specified cost based on project type and area.*

PHASE II

Federal Costs			
Estimated Construction Cost +25% Contingency			$13,626,000
Supervision and Inspection	204 days @	816 per day	$166,000
Supervision and Administration			$272,500
State Costs			
Supervision and Administration			$254,390
Total Phase II Cost Estimate			**$14,319,000**

TOTAL ESTIMATED PROJECT FIRST COST	**15,970,000**

A-5

O&M Data

Annual Costs

Annual Inspections	$3,546
Annual Cost for Operations	$0
Preventive Maintenance (Included in Annual Cost for Operations)	$0

Specific Intermittent Costs

Construction Items				Year 5	Year 10	Year 15
Replace 33.3% of original rock section for entire length				$0	$1,010,000	$0
Contractor Mobilization/Demobilization				$0	$45,000	$0
			Subtotal	$0	$1,055,000	$0
			Subtotal w/ 10% contin.	***$0***	***$1,161,000***	***$0***
Engineer, Design & Administrative Costs						
Engineering and Design Cost				$0	$82,000	$0
Administrative Cost				$0	$4,384	$0
Eng Survey	26 days	@	$1,361 per day	$0	$35,386	$0
Construction I	31 days	@	$816 per day	$0	$25,296	$0
			Subtotal	***$0***	***$147,000***	***$0***
			Total	$0	$1,308,000	$0

Annual Project Costs:

Corps Administration	$644
Monitoring	$2,770

Construction Schedule:

		2001	2002	2003	2004	Total
Planning & D	**March-01**	7	9			16
Planning & D	**June-02**					
Const. Start	**November-02**					0
Const. End	**August-03**			10	0	10

All dates are in Federal Fiscal Years (October 1 to September 30)

GIWW Bank Restoration of Critical Areas in Terrebonne																					
Inflation Rate	3.2%	Price Level		2000		ominal Budget	$ 1,378,487														
ruction Contingency	10%			Fully Funded Budget			$ 2,079,548														
		1	2	3	4	5	6	7	8	9	10	11	12	13	14	15	16	17	18	19	20
Year	Rates	2004	2005	2006	2007	2008	2009	2010	2011	2012	2013	2014	2015	2016	2017	2018	2019	2020	2021	2022	2023
Items																					
Administration	4,384										1										
Design Services	82,000										1										
onstruction Inspection	816										31										
Survey Services	1,361										26										
Annual Operation	-																				
Inspection-One Day	3,546	1	1	1	1	1	1	1	1	1	1	1	1	1	1	1	1	1	1	1	1
Inspection-Two Day	4,794																				
Mob and Demob	49,500										1										
Structure Repair	-																-				
ardware Replacement	-																				
Rock Replenishment	1,111,000										1										
Terrace Repair	-																				
Channel Maintenance	-																				
Signs	-																				

A-7

GIWW Bank Restoration of Critical Areas in Terrebonne																					
Year	Rates	2004	2005	2006	2007	2008	2009	2010	2011	2012	2013	2014	2015	2016	2017	2018	2019	2020	2021	2022	2023
Items																					
Administration	4,384										4,384										
Design Services	82,000										82,000										
onstruction Inspection	816										25,307										
Survey Services	1,361										35,376										
Annual Operation	-																				
Inspection-One Day	3,546	3,546	3,546	3,546	3,546	3,546	3,546	3,546	3,546	3,546	3,546	3,546	3,546	3,546	3,546	3,546	3,546	3,546	3,546	3,546	3,546
Inspection-Two Day	4,794																				
Mob and Demob	49,500										49,500										
Structure Repair	-																				
ardware Replacement	-																				
Rock Replenishment	1,111,000										1,111,000										
Terrace Repair	-																				
Channel Maintenance	-																				
Signs	-																				
Nominal Total	1,378,487	3,546	3,546	3,546	3,546	3,546	3,546	3,546	3,546	3,546	1,311,113	3,546	3,546	3,546	3,546	3,546	3,546	3,546	3,546	3,546	3,546

GIWW Bank Restoration of Critical Areas in Terrebonne																					
Year	Rates	2004	2005	2006	2007	2008	2009	2010	2011	2012	2013	2014	2015	2016	2017	2018	2019	2020	2021	2022	2023
Items																					
Administration	4,384										6,602										
Design Services	82,000										123,495										
onstruction Inspection	816										38,114										
Survey Services	1,361										53,277										
Annual Operation	-																				
Inspection-One Day	3,546	4,022	4,151	4,284	4,421	4,562	4,708	4,859	5,014	5,175	5,340	5,511	5,688	5,870	6,058	6,251	6,451	6,658	6,871	7,091	7,318
Inspection-Two Day	4,794																				
Mob and Demob	49,500										74,549										
Structure Repair	-																				
ardware Replacement	-																				
Rock Replenishment	1,111,000										1,673,209										
Terrace Repair	-																				
Channel Maintenance	-																				
Signs	-																				
Fully Funded Total	2,079,548	4,022	4,151	4,284	4,421	4,562	4,708	4,859	5,014	5,175	1,974,586	5,511	5,688	5,870	6,058	6,251	6,451	6,658	6,871	7,091	7,318

All dates are in Federal Fiscal Years (October 1 to September 30)

December 12, 2000

APPENDIX B
TYPICAL DRAWINGS

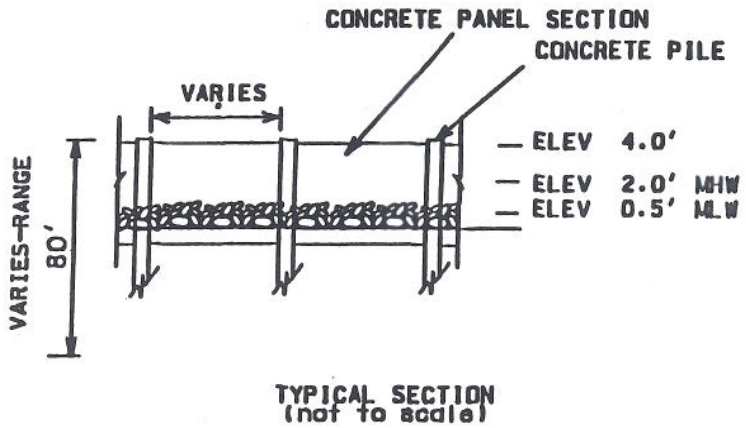

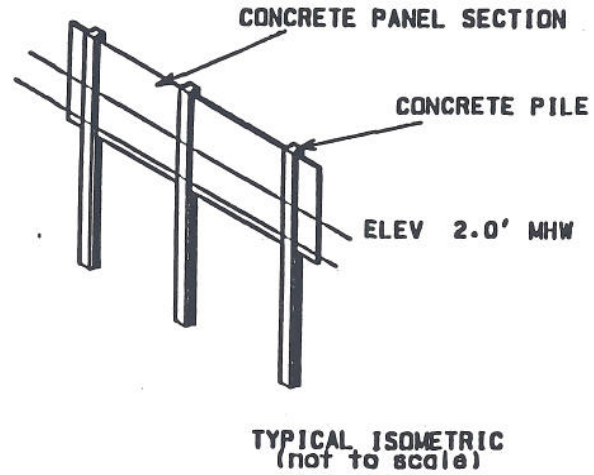

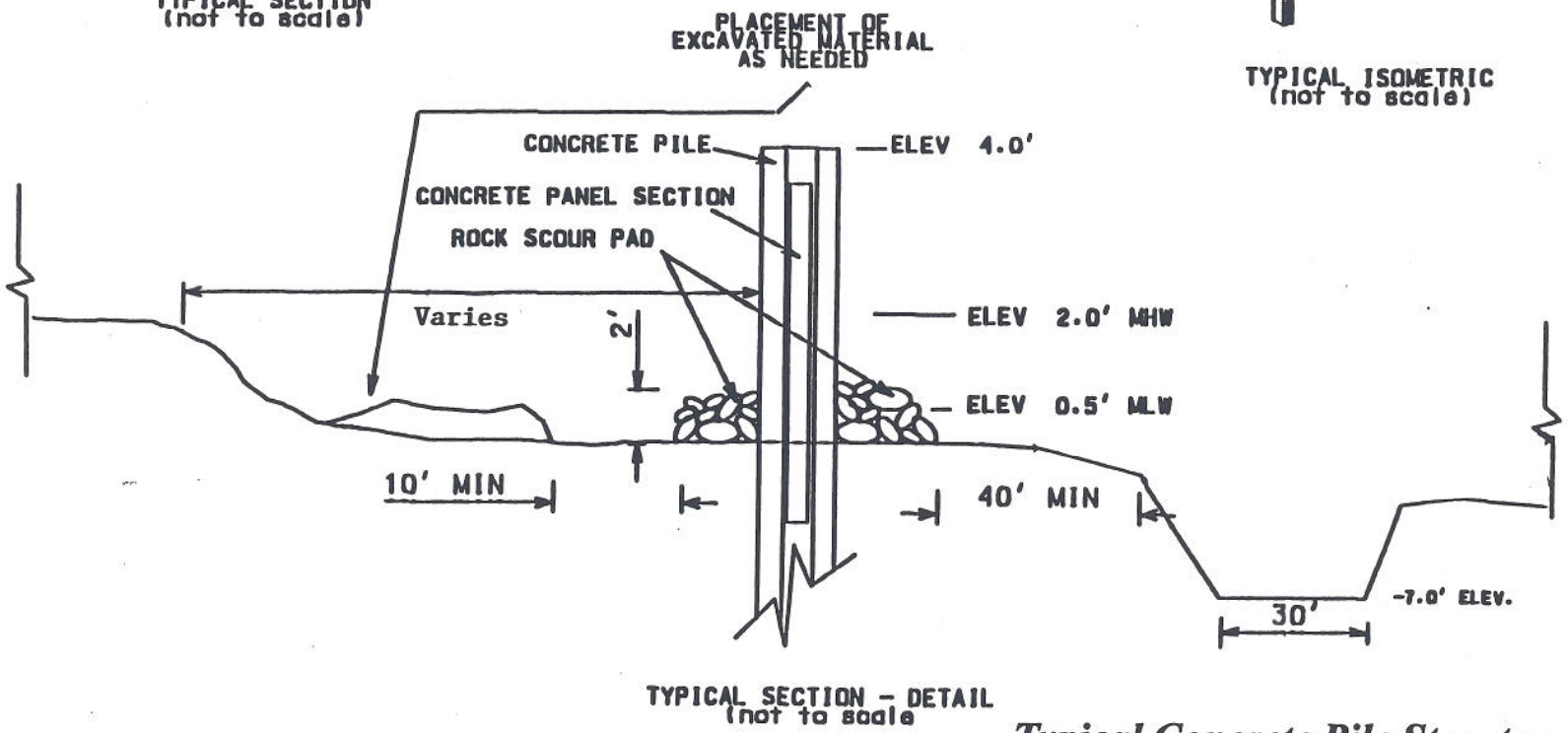

Typical Concrete Pile Structure

NOTES:

1. All elevations shown refer to NAVD88 datum.
2. Total length to be determined by design surveys.
3. Excavated material will be placed in open water areas on landward side of structure.
4. Structure will consist of continuous alignment except at designated manmade and natural openings.

TE-43 GIWW BANKLINE RESTORATION
TERREBONNE PARISH, LA

U.S. DEPARTMENT OF AGRICULTURE
NATURAL RESOURCES CONSERVATION SERVICE

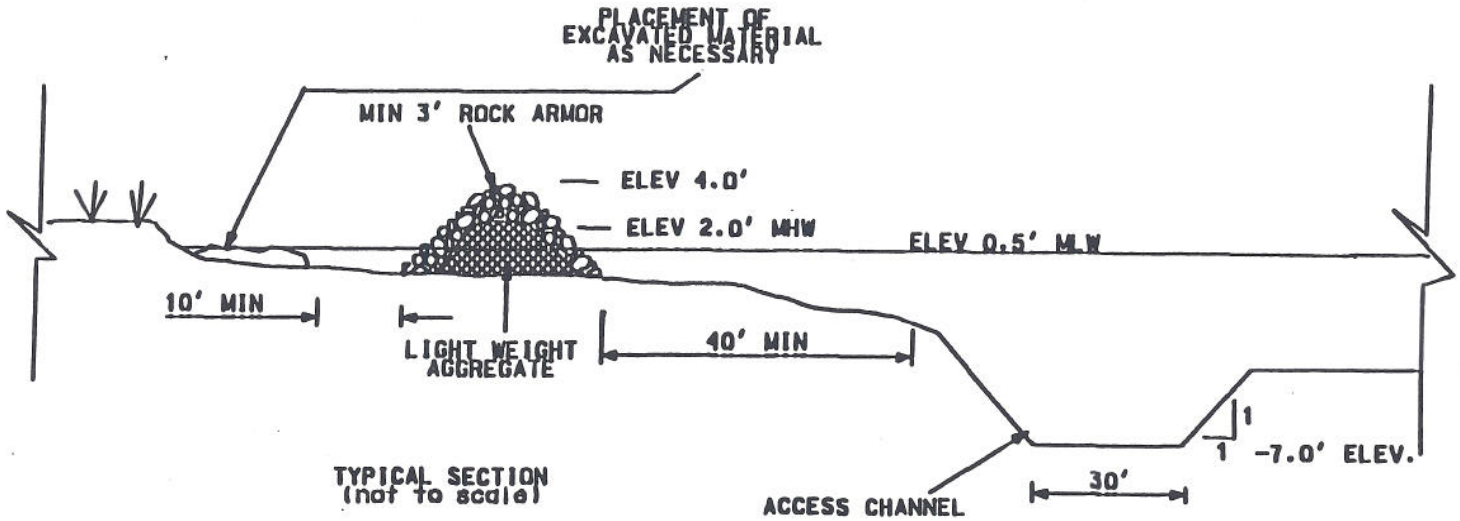

TYPICAL SECTION
(not to scale)

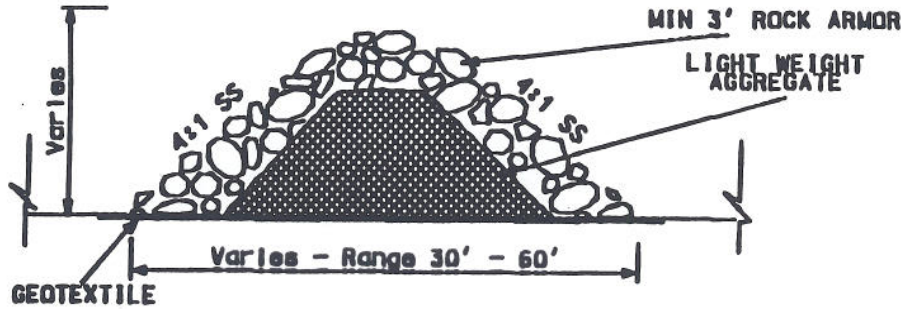

TYPICAL DETAIL
(not to scale)

Typical Foreshore Rock Dike w/ Lightweight Core Material

NOTES:

1. **All elevations shown refer to NAVD88 datum.**
2. **Total length to be determined by design surveys.**
3. **Excavated material will be placed in open water areas on landward side of structure.**
4. **Structure will consist of continuous alignment except at designated manmade and natural openings.**

TE-43 GIWW BANKLINE RESTORATION
TERREBONNE PARISH, LA

U.S. DEPARTMENT OF AGRICULTURE
NATURAL RESOURCES CONSERVATION SERVICE

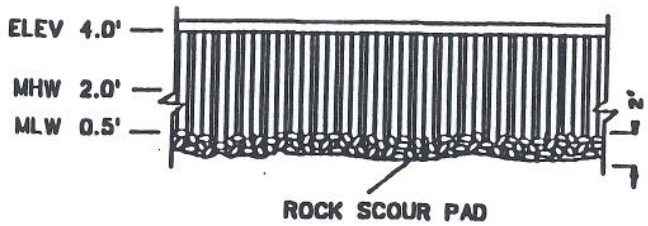

TYPICAL SECTION
(not to scale)

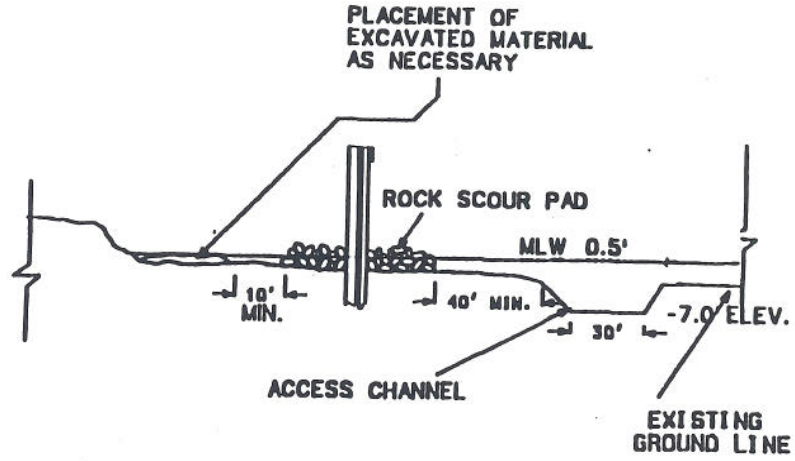

TYPICAL SECTION - DETAIL
(not to scale)

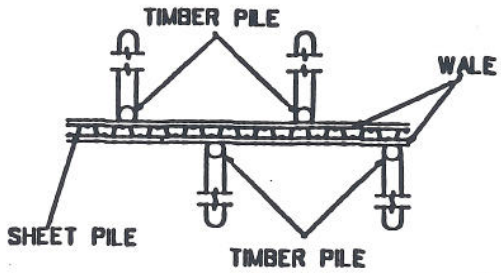

TYPICAL PLAN
(not to scale)

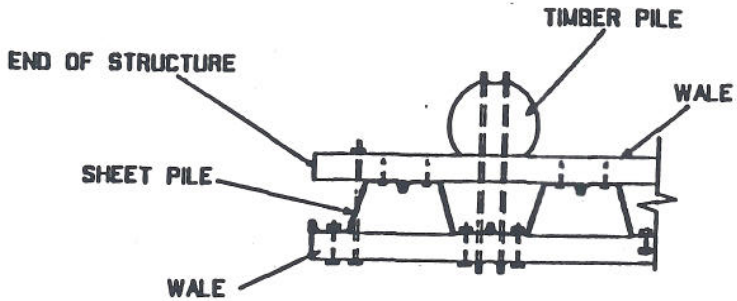

TYPICAL PLAN - DETAIL
(not to scale)

NOTES:

1. All elevations shown refer to NAVD88 datum.
2. Total length to be determined by design surveys.
3. Excavated material will be placed in open water areas on landward side of structure.
4. Structure will consist of continuous alignment except at designated manmade and natural openings.

Typical Sheet Pile Structure

TE-43 GIWW BANKLINE RESTORATION
TERREBONNE PARISH, LA

U.S. DEPARTMENT OF AGRICULTURE
NATURAL RESOURCES CONSERVATION SERVICE

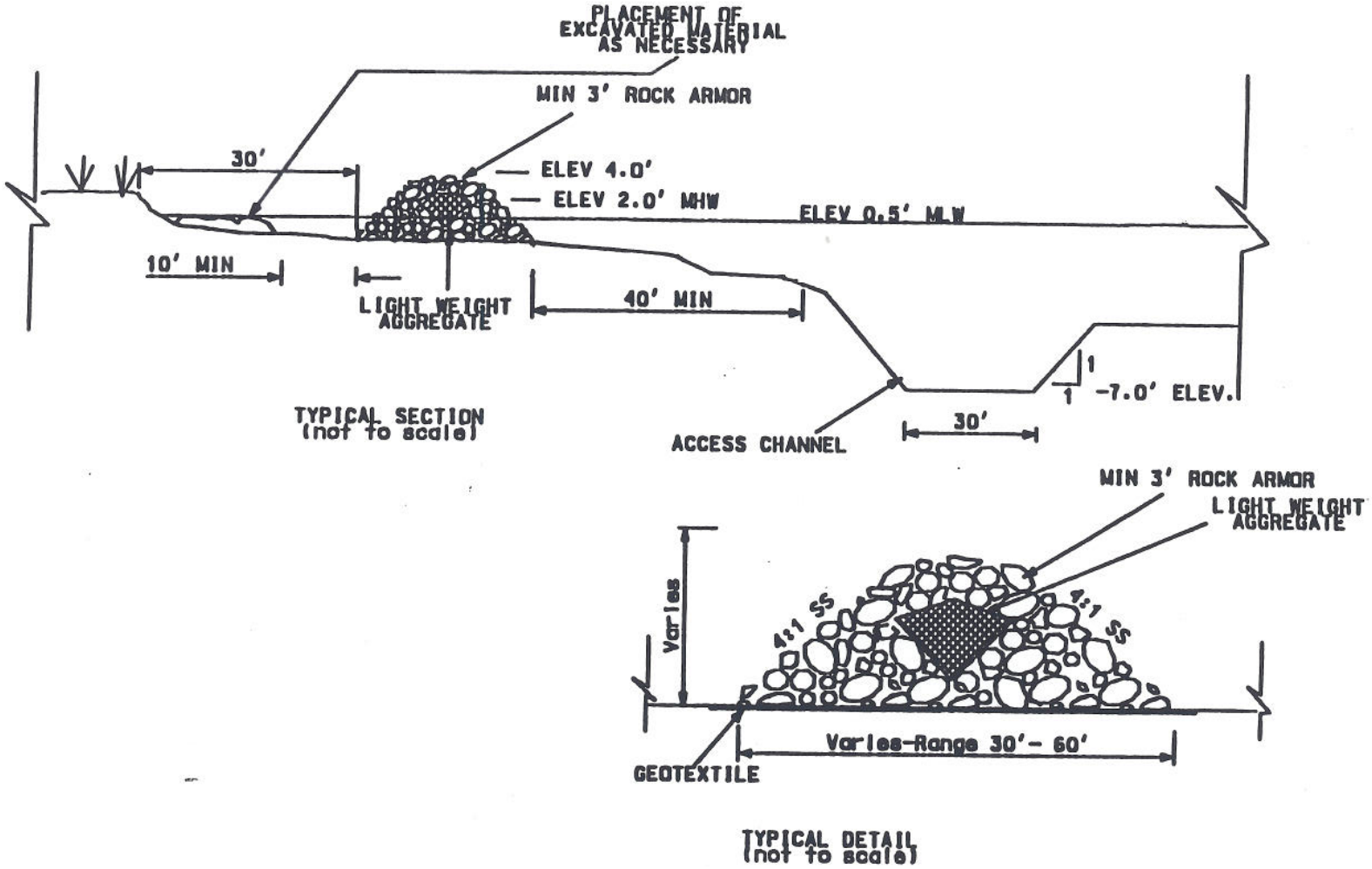

NOTES:

1. All elevations shown refer to NAVD88 datum.
2. Total length to be determined by design surveys.
3. Excavated material will be placed in open water areas on landward side of structure.
4. Structure will consist of continuous alignment except at designated manmade and natural openings.

Typical Furrow Rock Dike Structure

TE-43 GIWW BANKLINE RESTORATION
TERREBONNE PARISH, LA

U.S. DEPARTMENT OF AGRICULTURE
NATURAL RESOURCES CONSERVATION SERVICE

APPENDIX C – COMMENTS AND RESPONSES CONCERNING THE DRAFT EA

The following pages document the comments on the Draft EA, dated March 2002, that were received from federal and state agencies, and the responses to those comments by NRCS. Comments are summarized and, with responses, are grouped by agency. Page numbers used in individual agency comments refer to the Draft EA. Page numbers used in NRCS's responses to those comments refer to the document released in August 2002. Copies of agency letters are provided at the end of this Appendix.

In December 2001, a revised EA was prepared by NRCS and LDNR personnel for in-house review. Informal comments that were received are not reported in this Appendix, however they have been incorporated into the Final EA document.

LOUISIANA DEPARTMENT OF AGRICULTURE & FORESTRY

GENERAL COMMENTS:

Comment 1: It appears that there may be an opportunity to plant some woody Vegetation as part of this restoration project. If this is possible Please let this office or the Office of Forestry know if they can offer Any assistance.

Response: Presently, there are no plans included in the proposed project to Plant any woody or herbaceous vegetation. However, if future Conditions show that vegetative plantings would be beneficial, NRCS Will consult with the appropriate agencies to possibly implement This action.

SPECIFIC COMMENTS:

There were no specific comments.

UNITED STATES DEPARTMENT OF THE INTERIOR,
Fish and Wildlife Service

GENERAL COMMENTS:

Comment 1: An accurate and detailed evaluation of impacts cannot be completed until Engineering and design of the proposed project features have been Completed.

Response: Additional information has been added to Description of Alternatives Page 9, paragraph 6, concerning bankline restoration alternatives. Additional information has also been included in the Recommended Plan

Section, pages 14 and 15, paragraphs 6 and 1, respectively. Appendix "B" has also been added which will show typical designs of restoration alternatives.

SPECIFIC COMMENTS

Comment 1: Page 2, Paragraph 5, Sentence 1- Sentence states that "no long-term Adverse impacts to… threatened or endangered species…are Anticipated." We recommend that a statement be added to the EA To define and clarify those potential impacts, and a determination of Whether the proposed project is "likely (or not likely) to adversely Affect" that species should be included.

Response: Text has been added under Potential Adverse Impacts to address this

Comment.

Comment 2: Page 6, Fish and Wildlife Resources. This section should describe the Colonial nesting waterbird colonies which may be present in the project Area.

Response: Text has been added to this section which adequately addresses colonial Nesting waterbird habitat.

Comment 3: Page 7, Paragraph 2, Sentence 1. Critical habitat has not been designated For the bald eagle. Also, any Service recommendations that would be Incorporated into the project design should be explained.

Response: Text has been added under Threatened and Endangered Species which Adequately addresses bald eagle nesting habitat.

Comment 4: Those habitats and species (woody vegetation as neo-tropical migratory Bird habitat) were not included in the description of fish and wildlife Resources on page 6.

Response: See response for comment 2.

UNITED STATES DEPARTMENT OF COMMERCE
National Oceanic and Atmospheric Administration
National Marine Fisheries Service

GENERAL COMMENTS

Comment 1: Because the area is considered to be EFH, the draft Plan/EA should Include a description of the species and life stages of Federally Managed Fishery organisms that occur in that area, as well as the categories of EFH that could be impacted by project implementation. Additionally, The document should include an assessment of the potential impacts of the "no action" and "bankline stabilization" alternatives.

Response: Text has been added to Fish and Wildlife Resources, which acknowledges And describes species and life stages of Federally managed fishery Organisms that occur in the project area.

Comment 2: A thorough evaluation of potential impacts cannot be completed until a Specific project design has been selected and engineering and design of The project features have been completed.

Response: Additional information has been added to Description of Alternatives

Page 9, paragraph 6, concerning bankline restoration alternatives. Additional information has also been included in the Recommended

Response: (Continued)

Plan section, pages 14 and 15, paragraphs 6 and 1 respectively. Appendix "B" has also been added which will show typical designs Of restoration alternatives.

SPECIFIC COMMENTS

Comment 1: Document needs to be revised to include a description of those fishery Species which would be expected to use the fresh marshes of the Project area. The plan should be revised to include assessments of Potential impacts of the no action and preferred alternatives on marine Fishery resources in the appropriate section of the document.

Response: Appropriate text has been added to the Fish and Wildlife Resources Section which adequately describes fishery species which utilize the Fresh marshes of the project area. The Essential Fish Habitat Section Also addresses Federally managed fishery species. Potential impacts Have been added in the appropriate areas.

Comment 2: Page 6, paragraph 7. The last sentence of this paragraph should be Revised to properly reference the GMFMC as the Gulf of Mexico Fisheries Management Council.

Response: Sentence has been revised.

LOUISIANA DEPARTMENT OF AGRICULTURE & FORESTRY
BOB ODOM, COMMISSIONER
W.G. "BUD" COURSON, DEPUTY COMMISSIONER

ASSISTANT COMMISSIONERS

Agricultural & Environmental Sciences
Matthew Keppinger, III
P.O. Box 3596
Baton Rouge, LA 70821
(225) 925-3770
Fax: 925-3760

Agro-Consumer Services
Manning Broussard
P.O. Box 3098
Baton Rouge, LA 70821
(225) 922-1341
Fax: 922-0477

Animal Health Services
Terral Delphin
P.O. Box 1951
Baton Rouge, LA 70821
(225) 925-3962
Fax: 925-4103

Forestry
Paul D. Frey
P.O. Box 1628
Baton Rouge, LA 70821
(225) 925-4500
Fax: 922-1356

Management & Finance
Skip Rhorer
P.O. Box 3481
Baton Rouge, LA 70821
(225) 922-1255
Fax: 925-6012

Marketing
Bryce Malone
P.O. Box 3334
Baton Rouge, LA 70821
(225) 922-1277
Fax: 922-1289

Soil & Water Conservation
Bradley E. Spicer
P.O. Box 3554
Baton Rouge, LA 70821
(225) 922-1269
Fax: 922-2577

April 4, 2002

Mr. Bruce Lehto, Assistant State Conservationist
Water Resources/Rural Development
Natural Resources Conservation Service
3737 Government St.
Alexandria, LA 71302

Dear Bruce:

Thank you for providing this office the opportunity to review the Environmental Assessment for the GIWW Bankline Restoration Project (TE-43) in Terrebonne Parish, LA.

In reviewing the EA it appears that there may be an opportunity to plant some woody vegetation as part of this restoration project. If this is possible please let me know if this office or the Office of Forestry can be of any assistance in such an effort.

Sincerely,

Brad Spicer

Bradley E. Spicer, Executive Director
State Soil and Water Conservation Committee

BES:vw

cc: Paul Frey, State Forester

Post Office Box 631, 5825 Florida Blvd., Baton Rouge, Louisiana 70821-0631 Telephone: (225) 922-1234 Fax: (225) 922-1253 www.ldaf.state.la.us

United States Department of the Interior

FISH AND WILDLIFE SERVICE
646 Cajundome Blvd.
Suite 400
Lafayette, Louisiana 70506

May 7, 2002

Mr. Mike Tullos
Project Manager
United States Department of Agriculture
Natural Resources Conservation Service
Field Office Project Support Staff
646 Cajundome Blvd., Suite 180
Lafayette, Louisiana 70506

Dear Mr. Tullos:

In response to your April 1, 2002 request, the U.S. Fish and Wildlife Service (Service) has reviewed the draft Environmental Assessment (EA) for the GIWW Bankline Restoration Project (TE-43). That project would be constructed under the authority of the Coastal Wetlands Planning, Protection and Restoration Act (CWPPRA). The Service submits the following comments in accordance with the National Environmental Policy Act of 1969, as amended, and the Endangered Species Act of 1973 (87 Stat. 884, as amended; 16 U.S.C. 1531 et seq.).

General Comments

In general, this EA adequately describes the potential environmental impacts of the project; however, an accurate, detailed evaluation of those impacts cannot be completed until engineering and design of the proposed project features have been completed. Specific comments are provided in the following section.

Specific Comments

Page 2, Paragraph 5, Sentence 1 - This sentence states that "no long-term adverse impacts to . . . threatened or endangered species . . . are anticipated." If, however, construction activities associated with the proposed project would occur within 3,000 feet of an active bald eagle nest during the nesting season (i.e., October through mid-May), then the project could potentially have adverse impacts on nesting bald eagles. Accordingly, we recommend that a statement be added to the EA to define and clarify those potential impacts, and a determination of whether the proposed project is "likely (or not likely) to adversely affect" that species should be included. For example, "The proposed project is located in an area known to be inhabited by nesting bald eagles (*Haliaeetus leucocephalus*), a Federally listed threatened species. Bald eagles nest in Louisiana from October through mid-May. Because construction activities occurring within

3,000 feet of an active bald eagle nest during the nesting season could cause nest abandonment, those activities would be conducted during the non-nesting season. Accordingly, we have determined that the proposed project is not likely to adversely affect bald eagles."

Page 6, Fish and Wildlife Resources - This section should describe the colonial nesting waterbird colonies which may be present in the project area, as referenced in our October 22, 2001, letter to your agency.

Page 7, Paragraph 2, Sentence 1 - This sentence states that "construction restrictions will be within the guidelines set forth by FWS to insure protection of critical habitat and nesting requirements of the bald eagle." Critical habitat, however, has not been designated for the bald eagle. Also, any Service recommendations that would be incorporated into the project design should be explained. We recommend that sentence be revised to read "In order to protect nesting bald eagles, all work activities associated with the proposed bankline restoration alternative would be conducted outside of the bald eagle nesting season."

Page 11, last paragraph - The preferred alternative would protect woody vegetation as neo-tropical migratory bird habitat, according to this paragraph. Those habitats and species, however, were not included in the description fish and wildlife resources on page 6 and should be added to that section.

The Service fully supports the goal of this project. Marshes in the project area provide important habitat for numerous Federal trust species including wading birds and migratory waterfowl.

Thank you for the opportunity to provide comments on this draft EA. If you have any questions regarding our comments, please contact Martha Segura of this office at (337) 291-3110.

Sincerely,

Russell C. Watson
Acting Supervisor
Louisiana Field Office

cc: EPA, Baton Rouge, LA
NMFS, Baton Rouge, LA
U.S. Army Corps of Engineers, New Orleans, LA
LA Dept. of Natural Resources (CRD), Baton Rouge, LA
LA Dept. of Wildlife and Fisheries, Baton Rouge, LA

RECEIVED
USDA SCS MAIL ROOM
MAY 15 10 26 AM '02

UNITED STATES DEPARTMENT OF COMMERCE
National Oceanic and Atmospheric Administration
NATIONAL MARINE FISHERIES SERVICE
Southeast Regional Office
9721 Executive Center Drive North
St. Petersburg, Florida 33702

May 13, 2002 F/SER44/RH:jk
225/389-0508

Mr. Bruce Lehto
Assistant State Conservationist
Water Resources/Rural Development
Natural Resources Conservation Service
U.S. Department of Agriculture
3737 Government Street
Alexandria, Louisiana 71302

Dear Mr. Lehto:

The National Marine Fisheries Service (NMFS) has received the draft Project Plan and Environmental Assessment (Plan/EA) for the Gulf Intracoastal Waterway Bankline Restoration Project (TE-43) transmitted by your April 1, 2002, letter. Your letter also initiated Essential Fish Habitat (EFH) consultation as required by the Magnuson-Stevens Fishery Conservation and Management Act (MSFCMA). The draft Plan/EA describes the proposed construction of about 37,000 feet of bankline protection along the Gulf Intracoastal Waterway in Terrebonne Parish, Louisiana. This project has been funded under the auspices of the Coastal Wetlands Planning, Protection and Restoration Act with the Natural Resources Conservation Service serving as the Federal sponsor. The NMFS has reviewed the draft Plan/EA and offers the following general and specific comments:

General Comments

The draft Plan/EA states that the proposed project is located in fresh marsh which "contains no known fishery species" managed by the GMFMC. The NMFS disagrees with your agency's determination that project area wetlands do not serve as EFH for species managed by the Gulf of Mexico Fishery Management Council (GMFMC). Detailed information on Federally-managed species and their EFH is provided in the 1998 generic amendment of the Fishery Management Plans for the Gulf of Mexico. This amendment delineates the EFH requirements for various life stages of brown shrimp, white, shrimp, and red drum. Based on the information contained in the generic amendment and our knowledge of the project area, it is our determination that project area marshes serve as EFH for postlarval and juvenile brown shrimp, white shrimp, and red drum. Categories of EFH in the vicinity of the project area include estuarine emergent wetlands, estuarine water column, submerged aquatic vegetation, and estuarine mud substrates. Because the area is considered to be EFH, the draft Plan/EA should include a description of the species and life stages of Federally-managed fishery organisms that occur in that area, as well as the categories of EFH that could be impacted by project implementation. Additionally, the document should include an assessment of the potential impacts of the "no action" and "bankline stabilization" alternatives. Based on our knowledge of the project area and review of the document, we believe these impacts to be minimal.

Printed on Recycled Paper

Furthermore, if the project is effective at slowing erosion of marsh, its implementation would help protect categories of EFH more supportive of marine fishery production. The Plan/EA should include a discussion regarding the potential implications of project construction of EFH and Federally-managed fishery species.

The NMFS finds the Plan/EA includes a general assessment of potential project impacts. However, we note that a thorough evaluation of potential impacts cannot be completed until a specific project design has been selected and engineering and design of the project features has been completed. We recommend that the final Plan/EA not be issued until the engineering and design details of the proposed project have been substantially finalized.

Specific Comments

PROJECT SETTING

Fish and Wildlife Resources

Page 6, paragraphs 4, 5, and 6. This section of the Plan/EA does not describe any commercially and recreationally important fishery species which would be expected to use the fresh marshes of the project area. We recommend that the document be revised to include a description of those fishery species, including blue crab, gulf menhaden, Atlantic croaker, white and brown shrimp, red drum, and striped mullet. Some of these species serve as prey for other species which are managed under the MSFCMA by the GMFMC (e.g., red drum, mackerels, and snappers) and highly migratory species managed by the NMFS (e.g., billfishes and sharks). We recommend the Plan/EA be revised to include assessments of the potential impacts of the no action and preferred alternatives on marine fishery resources in the appropriate section of the document.

Essential Fish Habitat

Page 6, paragraph 7.

The last sentence of this paragraph should be revised to properly reference the GMFMC as the Gulf of Mexico Fisheries Management Council.

We appreciate the opportunity to review and comment on the draft Plan/EA. Based on our review of the document and knowledge of aquatic resources in the project area, we have no EFH Conservation Recommendations to provide. This concludes your EFH consultation requirements under the MSFCMA. Please do not hesitate to contact Rachel Sweeney of this office at (225)389-0508 if you or your staff would like discuss our comments.

Sincerely,

Richard Hartman

for Andreas Mager, Jr.
Assistant Regional Administrator
Habitat Conservation Division

c:
COE, Planning, Podany
FWS, Lafayette, Clark
EPA, Dallas, McQuiddy
LA DNR, Consistency
F/SER4
Files