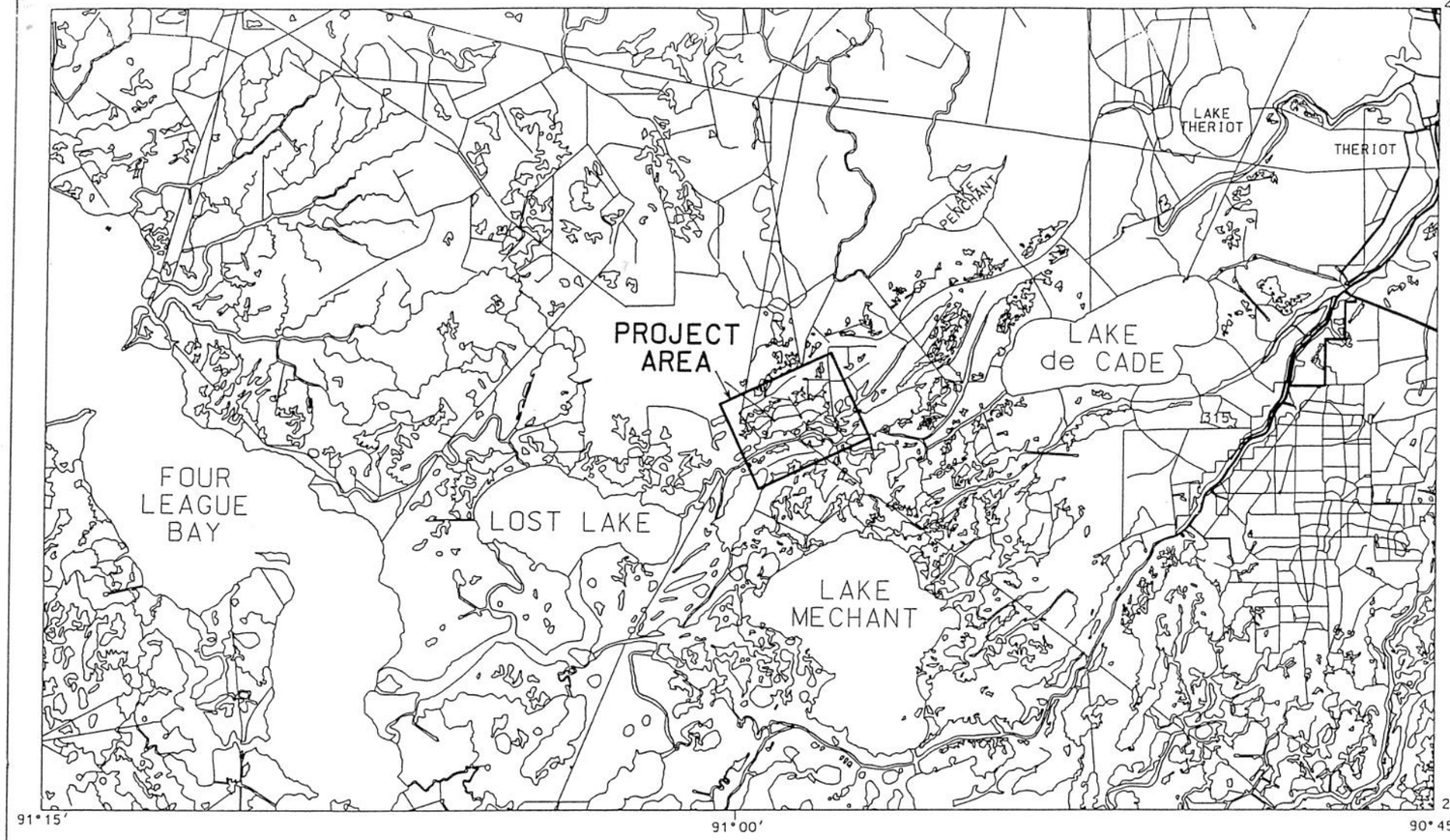

BRADY CANAL HYDROLOGIC RESTORATION
CONSTRUCTION UNIT 1,(PTE-26B)

BUILT UNDER THE
COASTAL WETLANDS
PLANNING, PROTECTION,
AND
RESTORATION ACT
PUBLIC LAW 101-646

BY THE
LOUISIANA
DEPARTMENT OF NATURAL RESOURCES

WITH THE ASSISTANCE OF THE
NATURAL RESOURCES CONSERVATION SERVICE
OF THE
UNITED STATES DEPARTMENT OF AGRICULTURE
1999

VICINITY MAP

SCALE IN MILES 1 0 1 2 3

LOCATION
IN
LOUISIANA

N

INDEX OF DRAWINGS

1 COVER SHEET
2 PROJECT LOCATION MAP
3 PROPOSED EMBANKMENT - PLAN VIEW
4 EMBANKMENT PROFILE - 0+00 - 30+00
5 EMBANKMENT PROFILE - 30+00-60+00
6 EMBANKMENT PROFILE - 60+00-90+00
7 EMBANKMENT PROFILE - 90+00-120+00
8 EMBANKMENT PROFILE - 120+00-150+00
9 EMBANKMENT PROFILE - 150+00-177+63
10 TYPICAL SECTIONS

COPY

Date
Designed C. E. LaFleur 02/98
Drawn A. J. Gremillion 02/98
Traced
Checked James N. Moore 01/99
Approved by
Title
Title

REVISIONS
DATE | APPR. | TITLE

COVER SHEET
CONSTRUCTION UNIT NO. 1
BRADY CANAL HYD. REST. - PTE-26B
TERREBONNE PARISH, LOUISIANA

U.S. DEPARTMENT OF AGRICULTURE - NATURAL RESOURCES CONSERVATION SERVICE

CAD FILE NO.
LA-231

DRAWING NO.
231_02

SHEET NO 1 OF 10

c:\drawills\231\231-02.dgn Feb 14, 1999 15:24:39

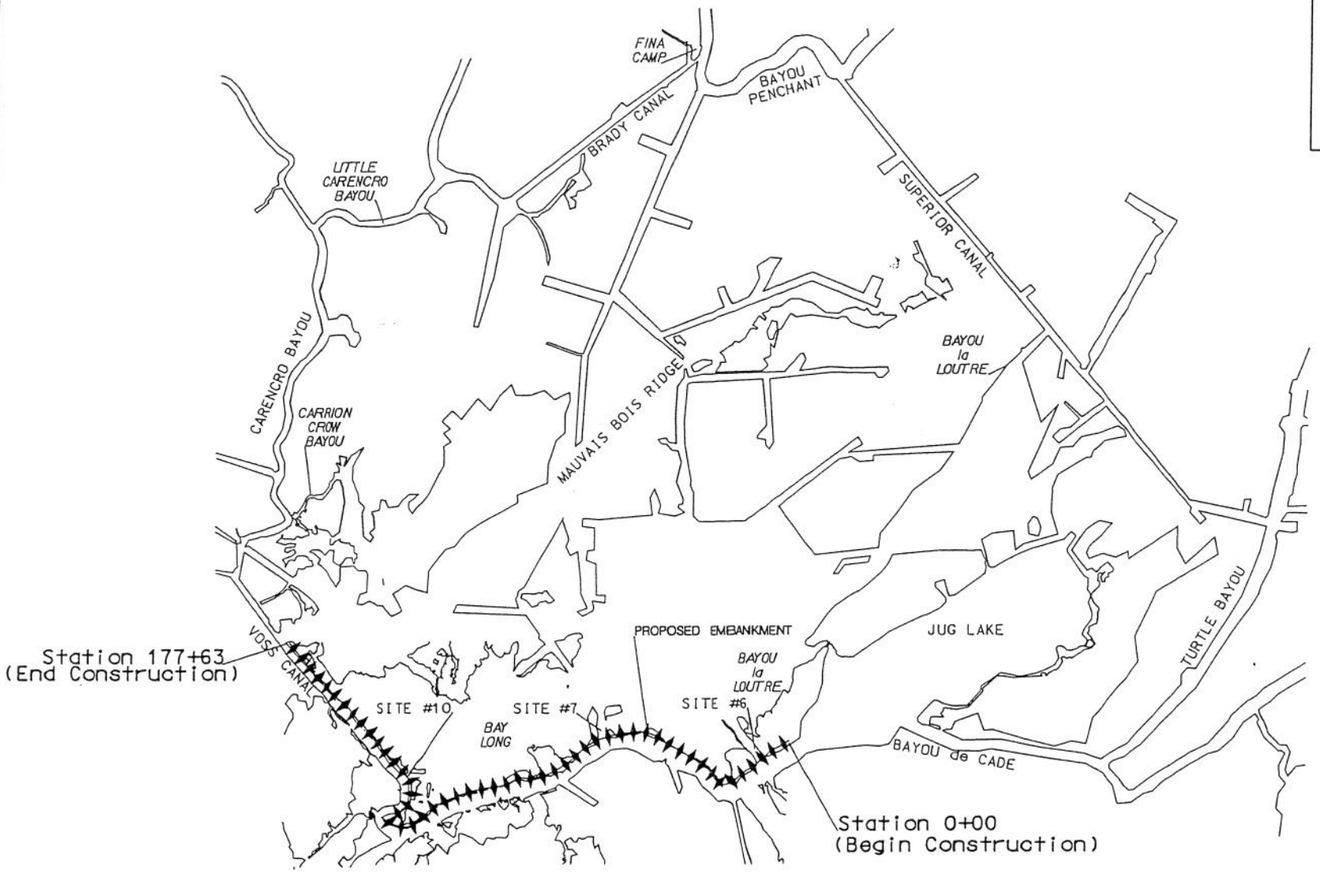

PROJECT LOCATION MAP

SCALE IN FEET
2000 0 2000 4000 6000 8000
7/8 3/4 5/8 1/2 3/8 1/4 1/8 0 1
SCALE IN MILES

NOTE:
KNOWN PIPELINES AND UTILITIES ARE SHOWN ON THE PLANS. IT IS POSSIBLE THAT SOME MAY EXIST THAT HAVE NOT BEEN SHOWN. THE CONTRACTOR SHALL BE ON THE ALERT FOR SUCH PIPELINES AND UTILITES, AND SHALL REPORT THEM IMMEDIATELY TO THE CONTRACTING OFFICER.

NOTICE:
48 HOURS BEFORE DIGGING
CALL 1-800-272-3020
TO LOCATE UTILITY LINES

N

NOTES:
1. ALL ELEVATIONS ARE BASED ON NAVD 88 DATUM.
2. KNOWN UTILITIES ARE SHOWN ONLY ON THE PROPOSED EMBANKMENT-PLAN VIEW (SHEET 3 OF 10).
3. SEE SHEET 3 OF 10 FOR LAND RIGHTS INFORMATION.
4. THE FINAL ALINGNMENT OF THE EARTHEN EMBANKMENT WILL BE STAKED IN THE FIELD BY THE COTR.

Designed C. E. LaFleur Date 11/97
Drawn A. J. Gremillion 11/97
Traced
Checked James N. Moore 01/99
Approved by
Title
Title

PROJECT LOCATION MAP
CONSTRUCTION UNIT NO. 1
BRADY CANAL HYD. REST. - PTE-26B
TERREBONNE PARISH, LOUISIANA

U.S. DEPARTMENT OF AGRICULTURE - NATURAL RESOURCES CONSERVATION SERVICE

REVISIONS
DATE APPR. TITLE

STATE OF LOUISIANA
GIERING III
REG. NO. 8033
REGISTERED PROFESSIONAL ENGINEER
IN
CIVIL ENGINEERING

CAD FILE NO.
LA-231
DRAWING NO.
PROJECT
SHEET NO 2 OF 10

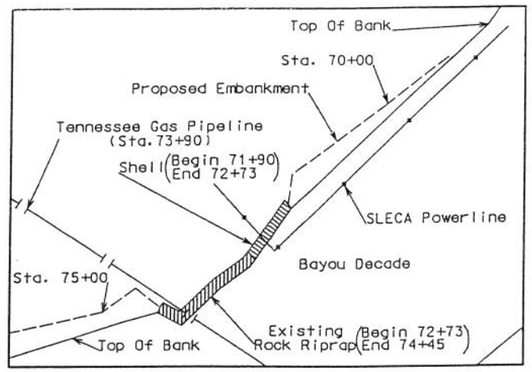

INSET NO. 3

100 0 100 200 300 400

SCALE IN FEET

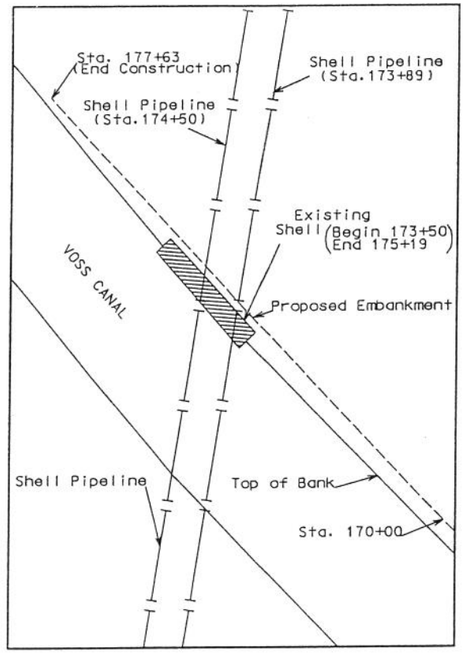

INSET NO. 2

100 0 100 200 300 400

SCALE IN FEET

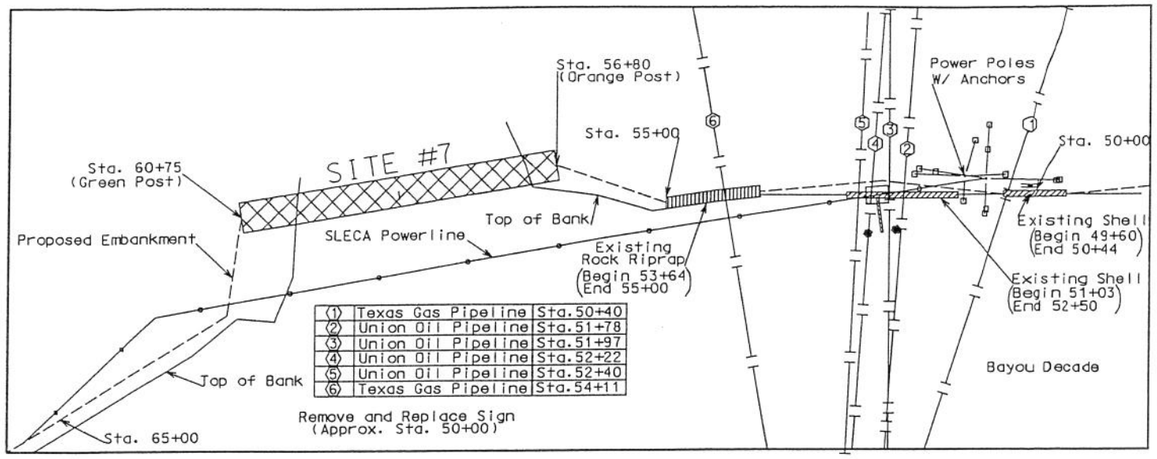

INSET NO. 1

100 0 100 200 300 400

SCALE IN FEET

EMBANKMENT SCHEDULE

STA. 0+00 TO STA. 6+85	EARTHEN EMBANKMENT
STA. 6+85 TO STA. 10+13	SITE NO. 6 (SEE CU #2)
STA. 10+13 TO STA. 17+30	EARTHEN EMBANKMENT
STA. 17+30 TO STA. 22+50	ROCK EMBANKMENT (BASE BID)
STA. 22+50 TO STA. 25+60	EARTHEN EMBANKMENT
STA. 25+60 TO STA. 42+40	ROCK EMBANKMENT (BASE BID)
STA. 42+40 TO STA. 45+20	EARTHEN EMBANKMENT
STA. 45+20 TO STA. 47+50	ROCK EMBANKMENT (ADDITIVE A)
STA. 47+50 TO STA. 49+70	ROCK EMBANKMENT (ADDITIVE B)
STA. 49+70 TO STA. 50+30	EARTHEN EMBANKMENT
STA. 50+30 TO STA. 51+50	ROCK EMBANKMENT (ADDITIVE C)
STA. 51+50 TO STA. 52+50	ROCK EMBANKMENT (WITH ROCK FILL BASE)
STA. 52+50 TO STA. 56+80	EARTHEN EMBANKMENT
STA. 56+80 TO STA. 60+75	SITE NO. 7 (SEE CU #2)
STA. 60+75 TO STA. 137+93	EARTHEN EMBANKMENT
STA. 137+93 TO STA. 141+02	SITE NO. 10 (SEE CU #2)
STA. 141+02 TO STA. 177+63	EARTHEN EMBANKMENT

NOTE:
THE FINAL ALIGNMENT WILL BE STAKED IN THE FIELD BY THE COTR.

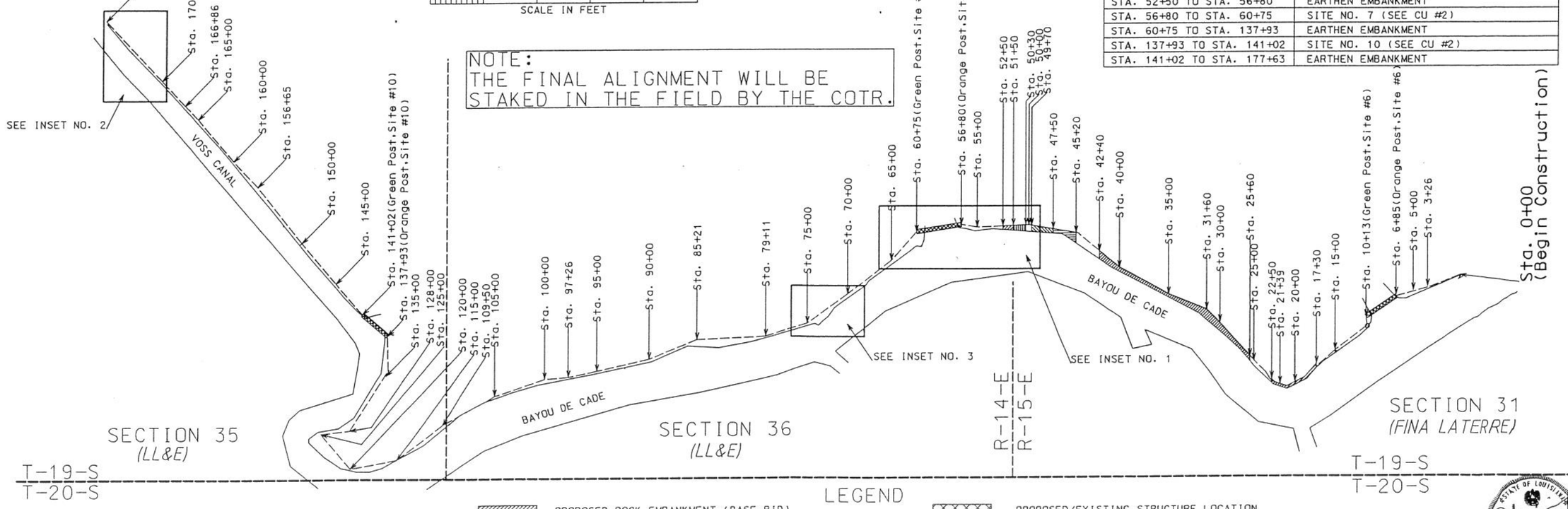

PLAN MAP

500 0 500 1000 1500 2000

SCALE IN FEET

LEGEND

- PROPOSED ROCK EMBANKMENT-(BASE BID)
- PROPOSED ROCK EMBANKMENT-(ADDITIVE A)
- PROPOSED ROCK EMBANKMENT-(ADDITIVE B)
- PROPOSED ROCK EMBANKMENT-(ADDITIVE C)
- PROPOSED/EXISTING STRUCTURE LOCATION
- APPROXIMATE LOCATION OF PROPOSED EMBANKMENT
- EXISTING TOP BANK OF CHANNEL

STATE OF LOUISIANA — JOHN STERLING, III — NO. 24033 — REGISTERED PROFESSIONAL ENGINEER IN CIVIL ENGINEERING

Date
Designed C. E. LaFleur 11/97
Approved by
Drawn A. J. Gremillion 11/97 Title
Traced
Checked James N. Moore 01/99 Title

PROPOSED EMBANKMENT - PLAN VIEW
CONSTRUCTION UNIT NO. 1
BRADY CANAL HYD. REST. - PTE-26B
TERREBONNE PARISH, LOUISIANA

U.S. DEPARTMENT OF AGRICULTURE - NATURAL RESOURCES CONSERVATION SERVICE

REVISIONS | DATE | APPR. | TITLE

CAD FILE NO. LA-231
DRAWING NO. EMBANK
SHEET NO 3 OF 10

c:\drawla-231\embank.dgn Feb 14 1999 15:47:51

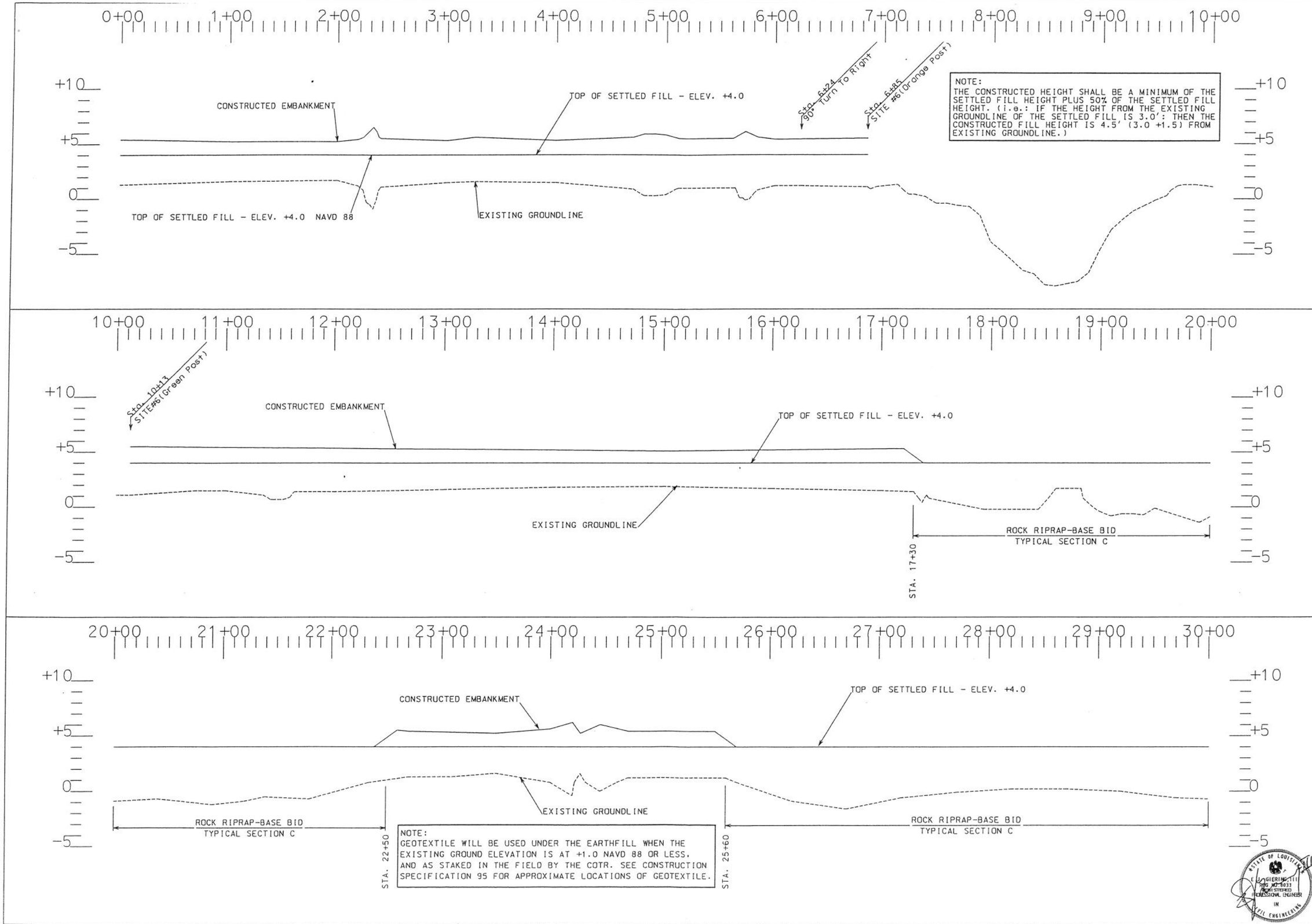

NOTE:
THE CONSTRUCTED HEIGHT SHALL BE A MINIMUM OF THE SETTLED FILL HEIGHT PLUS 50% OF THE SETTLED FILL HEIGHT. (i.e.: IF THE HEIGHT FROM THE EXISTING GROUNDLINE OF THE SETTLED FILL IS 3.0': THEN THE CONSTRUCTED FILL HEIGHT IS 4.5' (3.0 +1.5) FROM EXISTING GROUNDLINE.)

NOTE:
GEOTEXTILE WILL BE USED UNDER THE EARTHFILL WHEN THE EXISTING GROUND ELEVATION IS AT +1.0 NAVD 88 OR LESS, AND AS STAKED IN THE FIELD BY THE COTR. SEE CONSTRUCTION SPECIFICATION 95 FOR APPROXIMATE LOCATIONS OF GEOTEXTILE.

Designed Cherie E. LaFleur 11/97
Drawn A. J. Gremillion 11/97
Traced
Checked James N. Moore 01/99
Approved by
Title
Date

EMBANKMENT PROFILE - 0+00 - 30+00
CONSTRUCTION UNIT NO. 1
BRADY CANAL HYD. REST. - PTE-26B
TERREBONNE PARISH, LOUISIANA

U.S. DEPARTMENT OF AGRICULTURE - NATURAL RESOURCES CONSERVATION SERVICE

REVISIONS

DATE	APPR.	TITLE

CAD FILE NO. LA-231
DRAWING NO. EMBANK-0-30
SHEET NO 4 OF 10

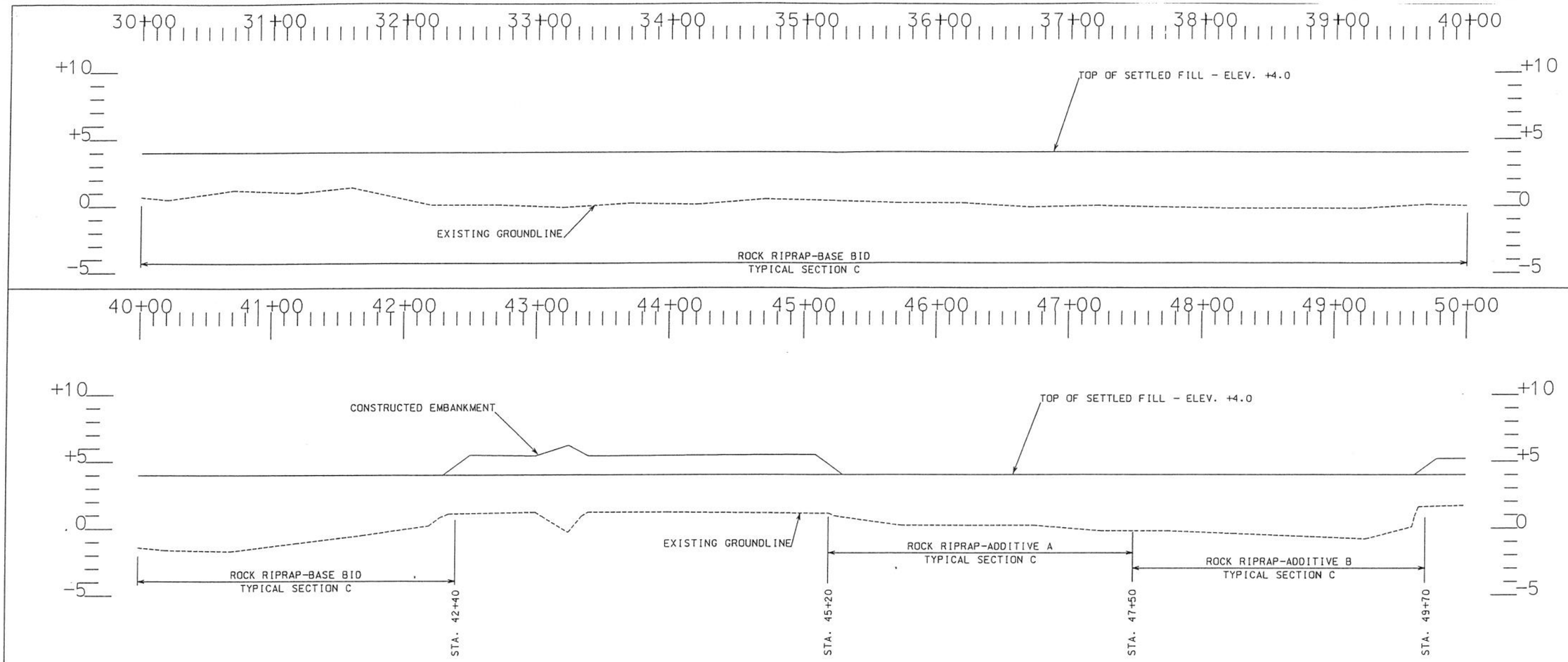

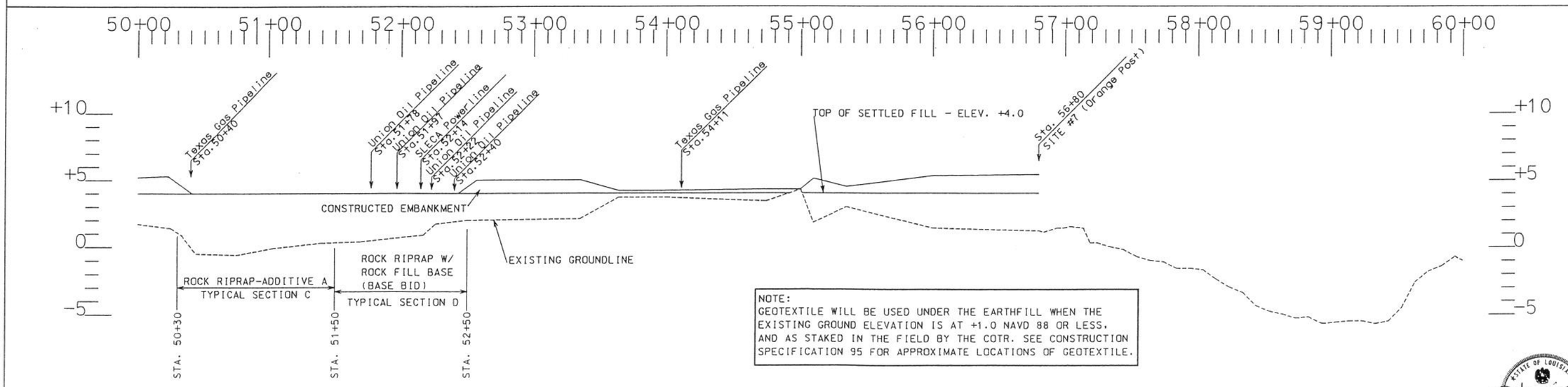

NOTE:
GEOTEXTILE WILL BE USED UNDER THE EARTHFILL WHEN THE EXISTING GROUND ELEVATION IS AT +1.0 NAVD 88 OR LESS, AND AS STAKED IN THE FIELD BY THE COTR. SEE CONSTRUCTION SPECIFICATION 95 FOR APPROXIMATE LOCATIONS OF GEOTEXTILE.

STATE OF LOUISIANA
E. J. GIERING, III
REG. NO. 24933
REGISTERED PROFESSIONAL ENGINEER IN CIVIL ENGINEERING

Date
Designed C. E. La Fleur 11/97
Approved by
Drawn A. J. Gremillion 11/97
Title
Traced
Checked James N. Moore 01/99
Title

EMBANKMENT PROFILE - 30+00-60+00
CONSTRUCTION UNIT NO. 1
BRADY CANAL HYD. REST. - PTE-26B
TERREBONNE PARISH, LOUISIANA
U.S. DEPARTMENT OF AGRICULTURE - NATURAL RESOURCES CONSERVATION SERVICE

REVISIONS		
DATE	APPR.	TITLE

CAD FILE NO.
LA-231
DRAWING NO.
EMBANK-30-60
SHEET NO 5 OF 10

\\drawdta-231\embank-30-60.dgn Feb 14, 1999 16:15:46

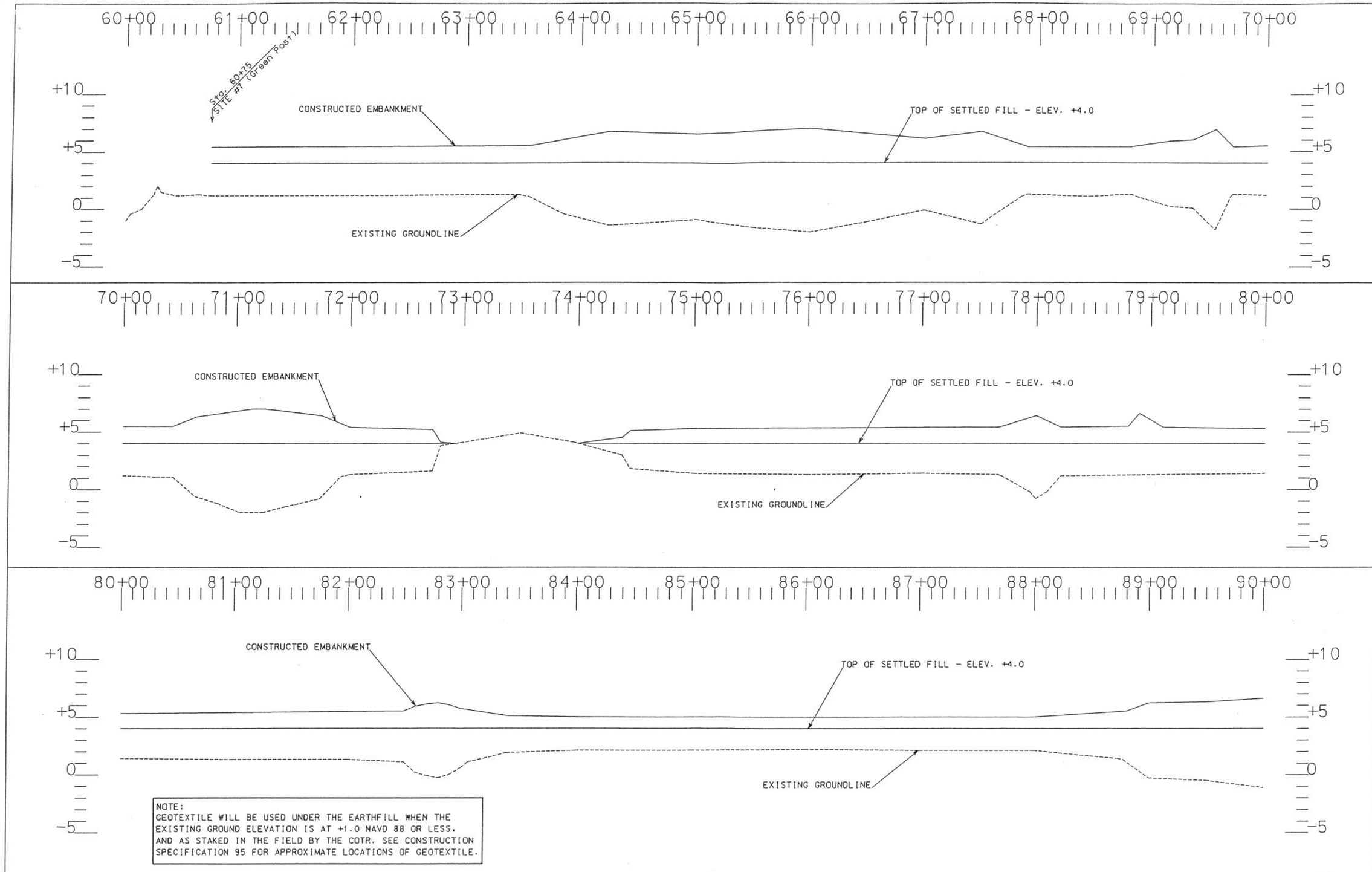

NOTE:
GEOTEXTILE WILL BE USED UNDER THE EARTHFILL WHEN THE EXISTING GROUND ELEVATION IS AT +1.0 NAVD 88 OR LESS. AND AS STAKED IN THE FIELD BY THE COTR. SEE CONSTRUCTION SPECIFICATION 95 FOR APPROXIMATE LOCATIONS OF GEOTEXTILE.

STATE OF LOUISIANA
E.J. GIERING III
REG. NO. 4033
REGISTERED PROFESSIONAL ENGINEER
IN
CIVIL ENGINEERING

		Date
Designed	C. E. La Fleur	11/97
Drawn	A. J. Gremillion	11/97
Traced		
Checked	James N. Moore	01/99

Approved by _____ Date _____
Title _____
Title _____

EMBANKMENT PROFILE 60+00 - 90+00
CONSTRUCTION UNIT NO. 1
BRADY CANAL HYD. REST. - PTE-26B
TERRBONNE PARISH, LOUISIANA

U.S. DEPARTMENT OF AGRICULTURE - NATURAL RESOURCES CONSERVATION SERVICE

REVISIONS		
DATE	APPR.	TITLE

CAD FILE NO. LA-231
DRAWING NO. EMBANK-60-90
SHEET NO 6 OF 10

\\drawila-231\embank-60-90.dgn Feb 14 1999 16:19:49

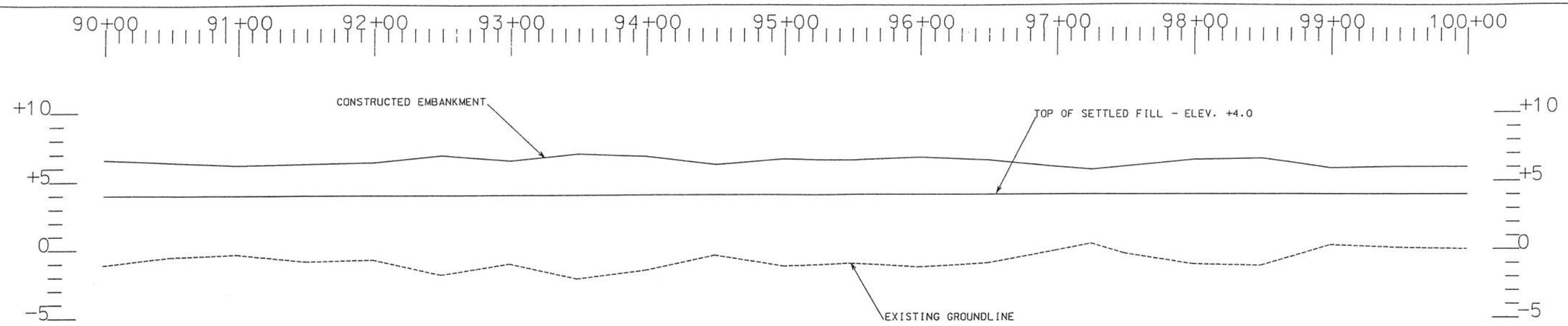

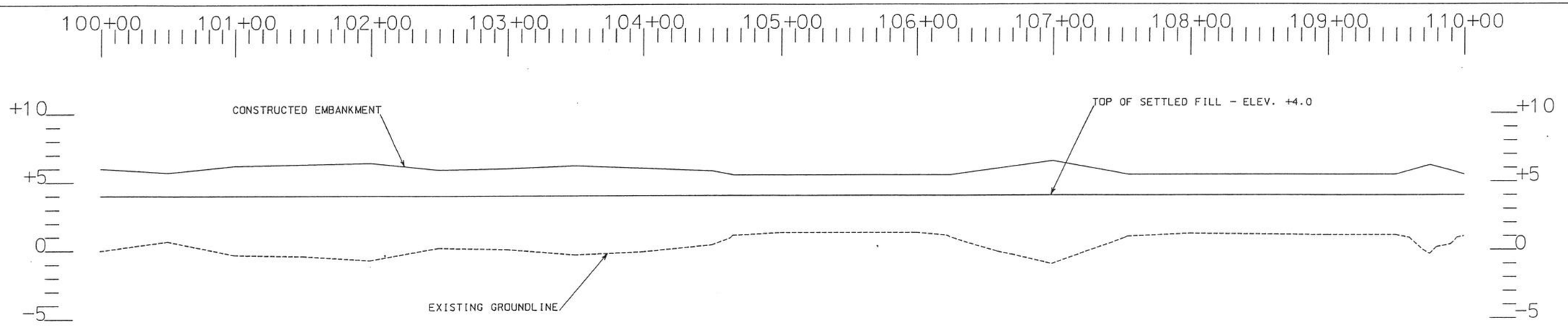

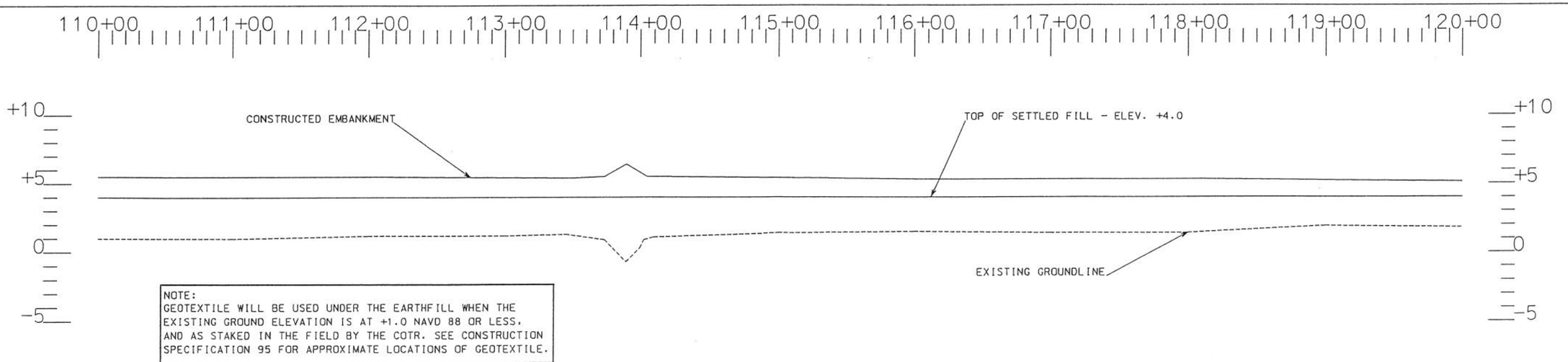

NOTE:
GEOTEXTILE WILL BE USED UNDER THE EARTHFILL WHEN THE EXISTING GROUND ELEVATION IS AT +1.0 NAVD 88 OR LESS, AND AS STAKED IN THE FIELD BY THE COTR. SEE CONSTRUCTION SPECIFICATION 95 FOR APPROXIMATE LOCATIONS OF GEOTEXTILE.

STATE OF LOUISIANA
C. E. GIESTING III
REG. NO. 24933
REGISTERED PROFESSIONAL ENGINEER IN CIVIL ENGINEERING

Date
Approved by
Title

Designed C. E. LaFleur — Date 11/97
Drawn A. J. Gremillion — 11/97
Traced
Checked James N. Moore — 01/99

EMBANKMENT PROFILE-(90+00-120+00)
CONSTRUCTION UNIT NO. 1
BRADY CANAL HYD. REST. - PTE-26B
TERREBONNE PARISH, LOUISIANA

U.S. DEPARTMENT OF AGRICULTURE - NATURAL RESOURCES CONSERVATION SERVICE

REVISIONS
DATE | APPR. | TITLE

CAD FILE NO.
LA-231

DRAWING NO.
EMBANK-90-120

SHEET NO 2 OF 10

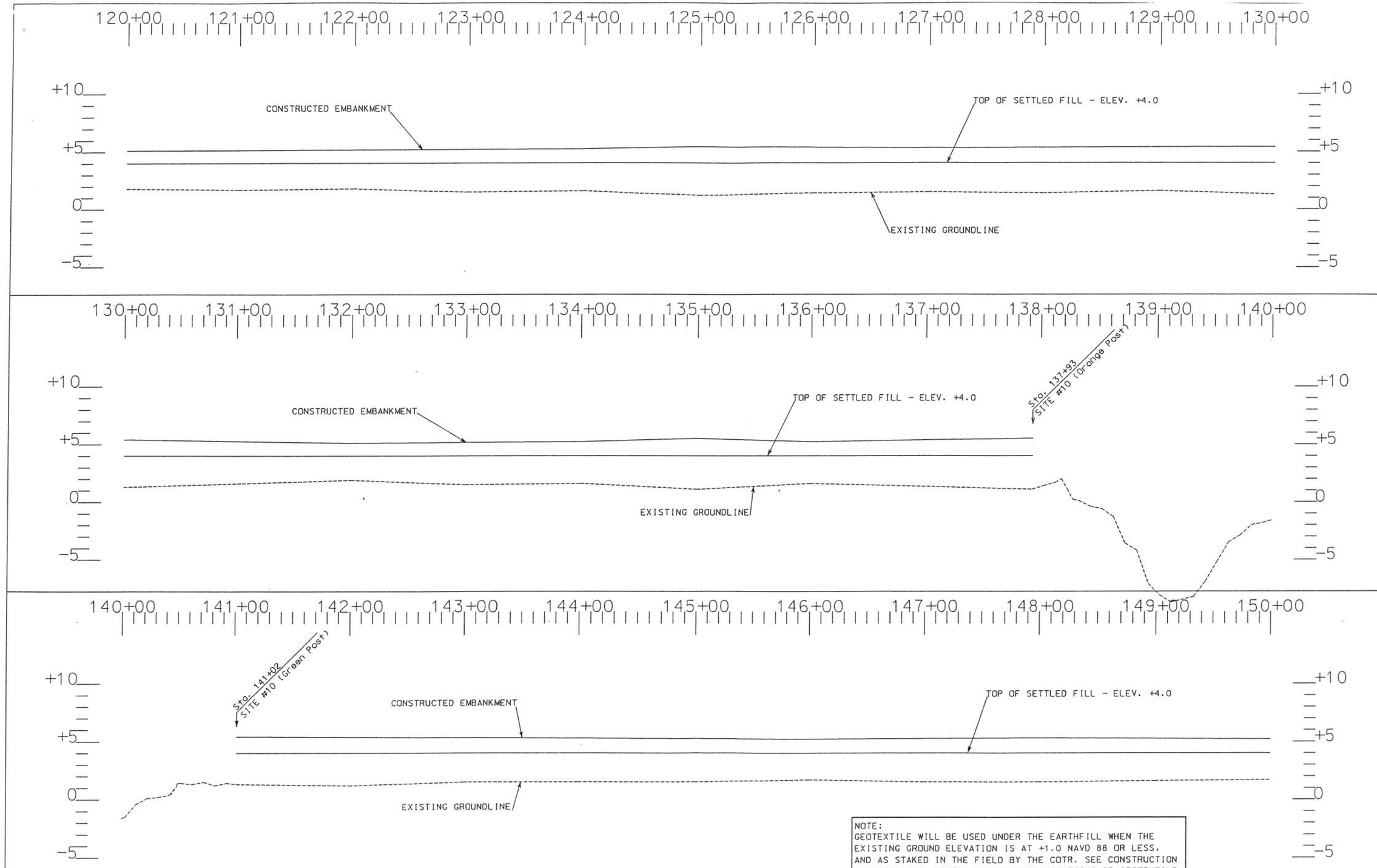

NOTE:
GEOTEXTILE WILL BE USED UNDER THE EARTHFILL WHEN THE EXISTING GROUND ELEVATION IS AT +1.0 NAVD 88 OR LESS, AND AS STAKED IN THE FIELD BY THE COTR. SEE CONSTRUCTION SPECIFICATION 95 FOR APPROXIMATE LOCATIONS OF GEOTEXTILE.

STATE OF LOUISIANA
ELJ GIERING III
REG NO 8033
REGISTERED PROFESSIONAL ENGINEER
IN CIVIL ENGINEERING

Designed	C. E. La Fleur	Date	11/97
Drawn	A. J. Gremillion	Approved by	
Traced		Title	
Checked	James N. Moore	Title	01/99

EMBANKMENT PROFILE-(120+00-150+00)
CONSTRUCTION UNIT NO. 1
BRADY CANAL HYD. REST. - PTE-26B
TERRBONNE PARISH, LOUISIANA

U.S. DEPARTMENT OF AGRICULTURE - NATURAL RESOURCES CONSERVATION SERVICE

REVISIONS		
DATE	APPR.	TITLE

CAD FILE NO. LA-231
DRAWING NO. EMBANK-120-150
SHEET NO 8 OF 10

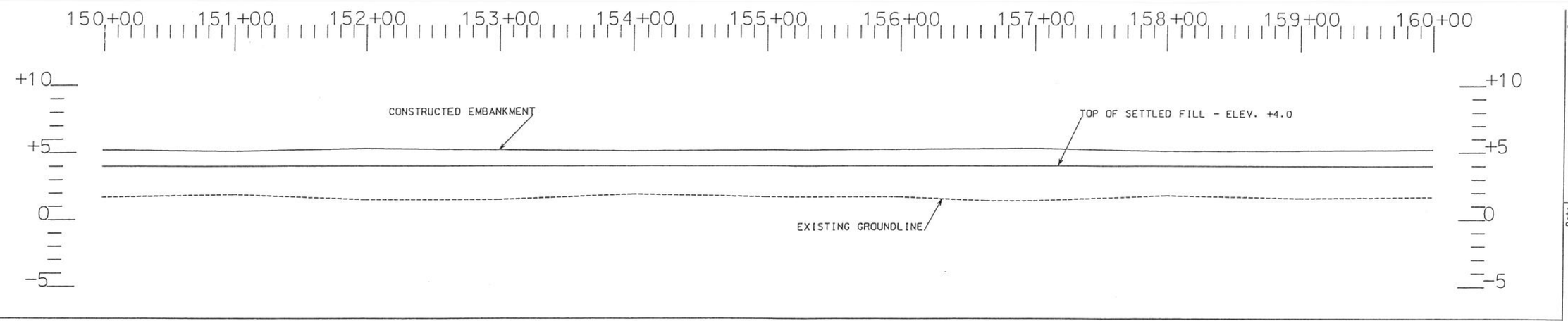

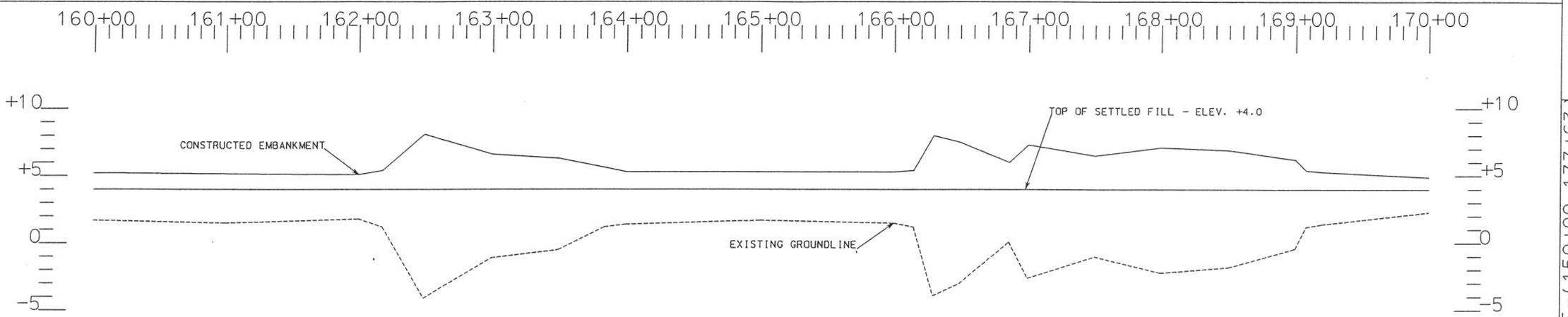

TOP OF SETTLED FILL - ELEV. +4.0 NAVD

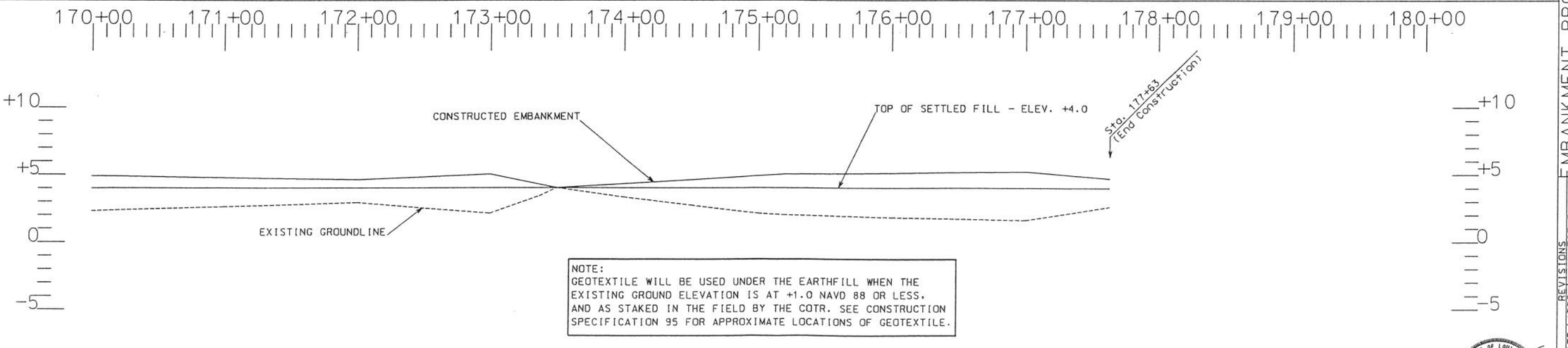

NOTE:
GEOTEXTILE WILL BE USED UNDER THE EARTHFILL WHEN THE EXISTING GROUND ELEVATION IS AT +1.0 NAVD 88 OR LESS, AND AS STAKED IN THE FIELD BY THE COTR. SEE CONSTRUCTION SPECIFICATION 95 FOR APPROXIMATE LOCATIONS OF GEOTEXTILE.

Dat
Approved by
Title
Date 11/97
Designed C. E. LaFleur
Drawn A. J. Gremillion 11/97
Traced
Checked James N. Moore 01/99
Title

EMBANKMENT PROFILE-(150+00-177+63)
CONSTRUCTION UNIT NO. 1
BRADY CANAL HYD. REST. - PTE-26B
TERREBONNE PARISH, LOUISIANA
U.S. DEPARTMENT OF AGRICULTURE - NATURAL RESOURCES CONSERVATION SERVICE

REVISIONS
DATE | APPR. | TITLE

CAD FILE NO.
LA-231
DRAWING NO.
EMBANK-150-177
SHEET NO 9 OF 10

STATE OF LOUISIANA
GIERING III
NO. 19933
REGISTERED
PROFESSIONAL ENGINEER
IN
CIVIL ENGINEERING

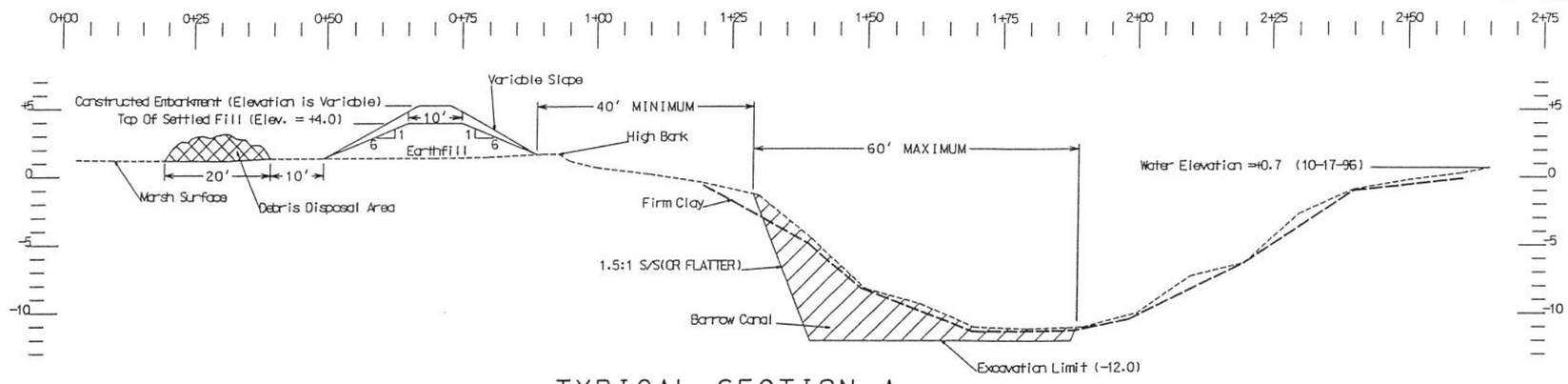

TYPICAL SECTION A

(WITHOUT GEOTEXTILE)

NOTE:
THE CONSTRUCTED HEIGHT SHALL BE A MINIMUM OF THE SETTLED FILL HEIGHT PLUS 50% OF THE SETTLED FILL HEIGHT. (i.e.: IF THE HEIGHT FROM THE EXISTING GROUNDLINE OF THE SETTLED FILL IS 3.0': THEN THE CONSTRUCTED FILL HEIGHT IS 4.5' (3.0 +1.5) FROM EXISTING GROUNDLINE.)

NOTE:
GEOTEXTILE WILL BE USED UNDER THE EARTHFILL WHEN THE EXISTING GROUND ELEVATION IS AT +1.0 OR LESS, AND AS STAKED IN THE FIELD BY THE COTR. SEE CONSTRUCTION SPECIFICATION 95 FOR APPROXIMATE LOCATIONS OF GEOTEXTILE.

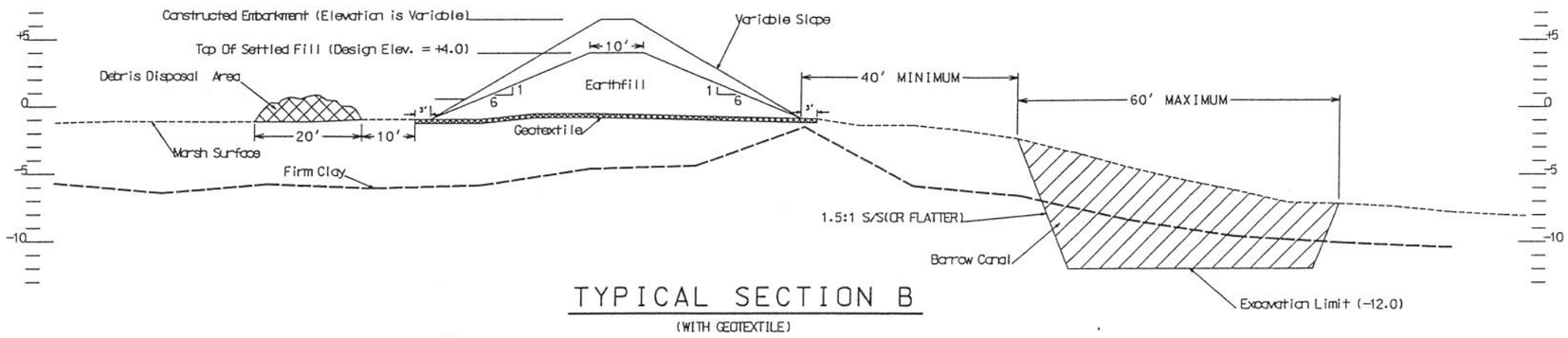

TYPICAL SECTION B

(WITH GEOTEXTILE)

NOTE:
GEOTEXTILE WILL BE USED UNDER ALL THE ROCK RIPRAP. SEE CONSTRUCTION SPECIFICATION 95 FOR APPROXIMATE LOCATIONS OF GEOTEXTILE.

CONSTRUCTION LIMITS	
Construction Width	Construction Length
300'	17763'
ESTIMATED QUANTITIES	
Geotextile	38400 SY
Rockfill	160 Tons

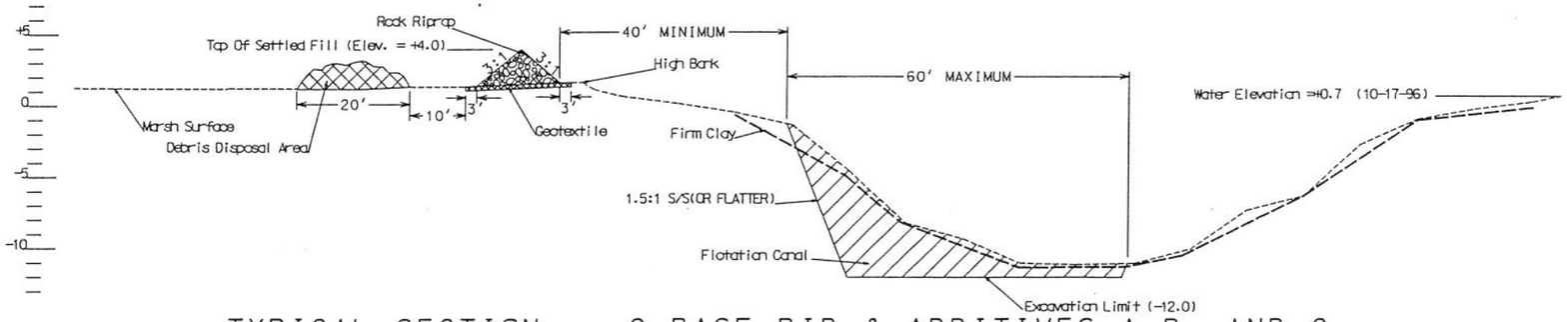

TYPICAL SECTION - C, BASE BID & ADDITIVES A, B, AND C

NOTE:
SEE CONSTRUCTION SPECIFICATION 61 FOR APPROXIMATE LOCATIONS OF ROCK RIPRAP

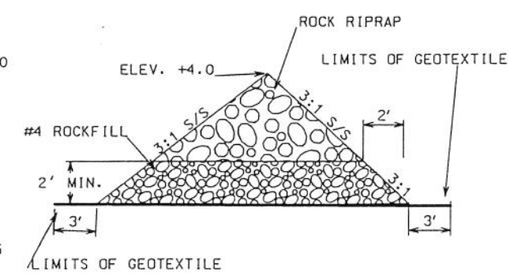

DETAIL A

NOTE:
SEE CONSTRUCTION SPECIFICATION 25 FOR APPROXIMATE LOCATIONS OF ROCKFILL

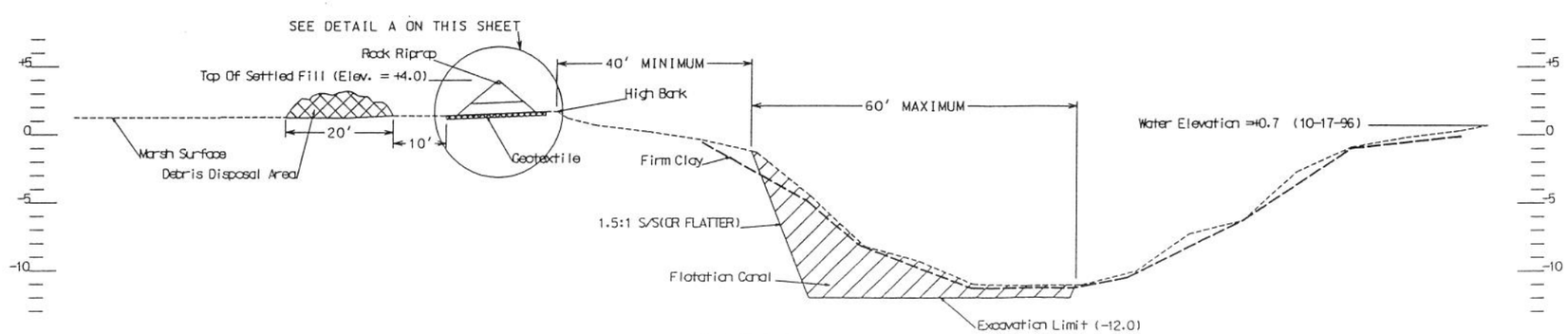

TYPICAL SECTION - D

TYPICAL SECTION FOR FILL OVER UNOCAL PIPELINE)

STATE OF LOUISIANA
E. J. GIERING III
REG. NO. 8033
REGISTERED PROFESSIONAL ENGINEER
IN
CIVIL ENGINEERING

		Date
Designed	C. E. LaFleur	11/97
Drawn	A. J. Gremillion	11/97
Traced		
Checked	James N. Moore	01/99

Approved by _____ Title _____ Title _____

TYPICALS SECTIONS
CONSTRUCTION UNIT NO. 1
BRADY CANAL HYD. REST. - PTE-26B
TERREBONNE PARISH, LOUISIANA

U.S. DEPARTMENT OF AGRICULTURE - NATURAL RESOURCES CONSERVATION SERVICE

REVISIONS		
DATE	APPR.	TITLE

CAD FILE NO. LA-231
DRAWING NO. TYPICALS
SHEET NO 10 OF 10