| FEDERAL PROJECT NOS. | STATE PROJECT NOS. | PARISH | SHEET NO. |
|---|---|---|---|
| PTE15bii | TE-27 | TERREBONNE | 1 |

STATE OF LOUISIANA
DEPARTMENT OF NATURAL RESOURCES
COASTAL RESTORATION DIVISION

PLANS OF PROPOSED

# ISLE DERNIERES RESTORATION PROJECTS

## WHISKEY ISLAND (PHASE 3b)

STATE PROJECT NO. TE-27
FEDERAL PROJECT NO. PTE15bii

TERREBONNE PARISH

## INDEX TO SHEETS


| SHEET NO. | DESCRIPTION |
|---|---|
| 1 | TITLE SHEET |
| 2 | SUMMARY ESTIMATED QUANTITIES, CIVIL LEGEND, & GENERAL NOTES |
| 3 | TOPOGRAPHICAL AERIAL MAP |
| 4 | TYPICAL CROSS-SECTIONS |
| 5-7 | PROJECT LAYOUT AERIALS |
| 8 | SAND SOURCE CONTOUR MAP (0-5') |
| 9 | SAND SOURCE CONTOUR MAP (5-10') |
| 10 | SAND SOURCE CONTOUR MAP (10-15') |
| 11 | SAND SOURCE CONTOUR MAP (0-5', 5-10', 10-15' Overlay) |
| 12 | WHARF DETAILS |
| 13 | OVERFLOW WEIR BOX DETAILS |
| 14-18 | BASELINE A CROSS-SECTIONS - COUPE NOUVELLE |
| 19 | BASELINE B CROSS-SECTIONS |
| 20 | BASELINE C CROSS-SECTIONS |
| 21-26 | BASELINE D CROSS-SECTION - BACKBAY |


DATUM USED: N.A.V.D.
MAG.VAR.: N/A
TRANSIT BOOK(S): PICCIOLA #182 & #183
BEARINGS ARE TRUE
AERIALS: 1"=400' & 1"=200'
DATE: 9/97
SCALES:
HOR. 1"=100'
VERT. 1"=5'

## TYPE OF CONSTRUCTION

HYDRAULIC DREDGING
BUCKET DREDGING
CONTAINMENT LEVEES/STRUCTURES
SHAPING DUNE & MARSH PLATFORM
TREATED TIMBER WHARF

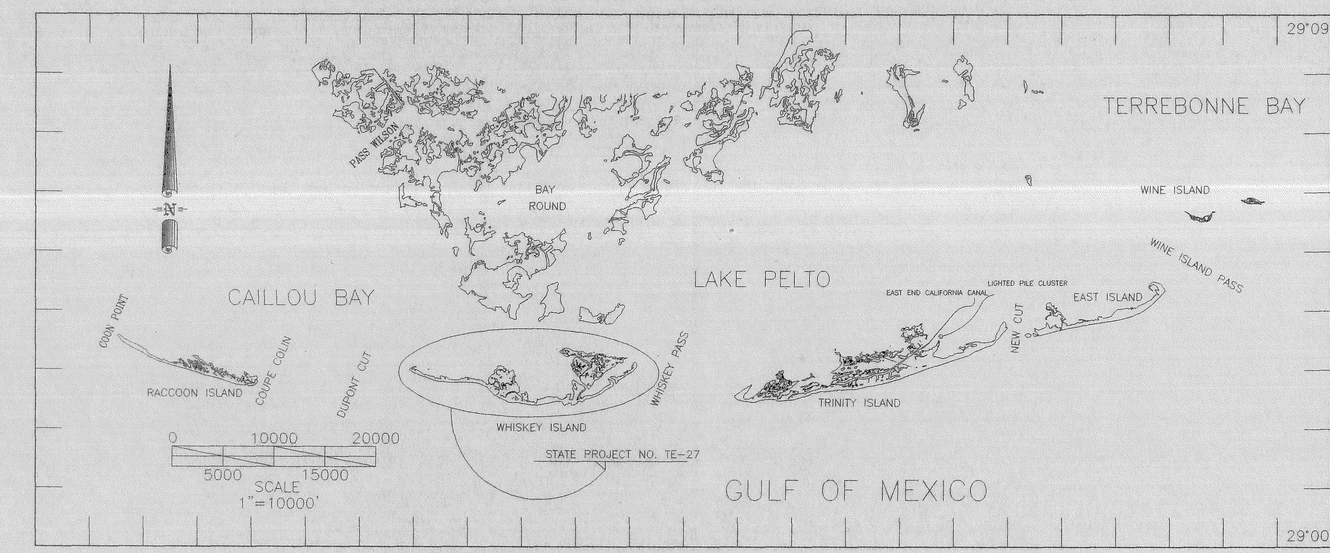


VICINITY MAP

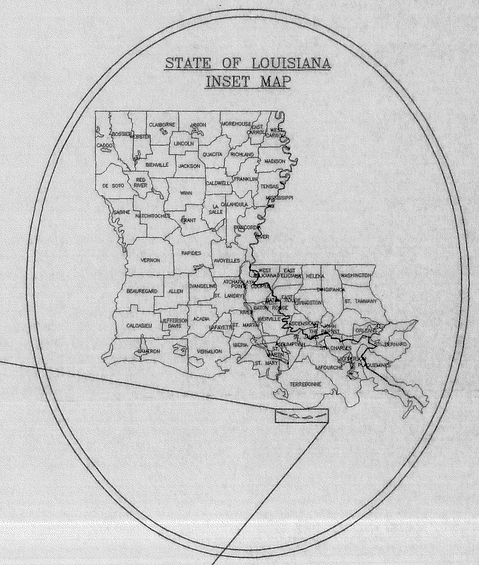


**ISSUE FOR CONSTRUCTION**

D.N.R. PROJECT MANAGER:
ARTHUR L. LONG, P.E. — DATE 1/7/98

PREPARED BY:
STATE OF LOUISIANA
DEPARTMENT OF NATURAL RESOURCES
D. BRIAN KENDRICK, P.E. — DATE 1/6/98

[redacted]

Ref: T. Baker Smith & Son, Inc. Construction Drawings "Isle Dernieres Restoration Projects, East Island (Phase 0) and Trinity Island (Phase 1), Terrebonne Parish, LA," Dated 9/97 Sheets 1-48.

Picciola and Associates Survey Drawings "Hydrographic and Topographic Survey, Whiskey Island Restoration Project Part1 (TE-27/PTE15bii), Terrebonne Parish, LA" Dated 8/14/97, Sheets 1-13.

FEDERAL PROJECT SPONSOR

STATE PROJECT SPONSOR

| FEDERAL PROJECT NO. | STATE PROJECT NOS. | PARISH | SHEET NO. |
|---|---|---|---|
| PTE15bii | TE-27 | TERREBONNE | 2 |

# SUMMARY OF ESTIMATED QUANTITIES

| ITEM No. | DESCRIPTION | UNIT | QUANTITY |
|---|---|---|---|
| 1 | MOBILIZATION AND DEMOBILIZATION | LUMP | LUMP |
| 2 | TREATED TIMBER WHARF CONSTRUCTION | LUMP | LUMP |
| 3 | COUPE NOUVELLE CONTAINMENT DIKE | L.F. | 750 |
| 4 | BREACH CONTAINMENT DIKE | L.F. | 1,820 |
| 5 | BACK BAY CONTAINMENT DIKE | L.F. | 6,550 |
| 6 | HYDRAULIC DREDGING | CU. YDS. | 3,000,000 |
| 7 | GRADING AND SHAPING | LUMP | LUMP |
| | ADDITIVE ALTERNATE NO. 1 | | |
| 8 | TURBIDITY SCREENS | L.F. | 5,000 |
| 9 | NODAL HYDRAULIC DREDGING | CU. YDS. | 700,000 |

## CIVIL LEGEND

- 3 — EXISTING CONTOUR LINE
- SLOPE BREAK LINE
- MARSH PLATFORM
- DUNE AT +4.0 N.A.V.D.
- HYDRAULIC FILL (CROSS-SECTIONS)
- AMWL = ANNUAL MEAN WATER LEVEL (+ 0.5 FT. NAVD)
- CONTAINMENT DIKES
- G.P.S. POINT WITH X, Y & Z CONTROL ON SURVEY BASELINE
- T.B.M., P.O.T., OR PI ON SURVEY TRAVERSE OR BASELINE SET BY ENGINEER, 3/4 INCH G.I.P.
- POINTS WITH LISTED COORDINATES
- COORDINATES OF GAS PIPELINES
- GEOTECHNICAL CORE HOLE
- PL8 — NATURAL GAS OR OIL PIPELINE WITH SIZE IN INCHES.
- OYSTER LEASE WITH ACREAGE
- BORROW AREA BOUNDARY
- 60 — PERCENTAGE (60%) SAND CONTOUR LINE
- MARSH OR BEACH
- DENOTED CROSS-SECTION LOCATIONS
- 0 – 5' SAND SOURCE
- 5' – 10' SAND SOURCE
- 10' – 15' SAND SOURCE
- BORROW AREA 0–10' (0–5' OVERLAY 5'–10')
- BORROW AREA 0–15' (0–5' OVERLAP 5'–10' AND 5'–10' OVERLAP 10'–15')
- BORROW AREA 5'–15'(5'–10' OVERLAP 10'–15'), (0–5' OVERBURDEN < 70% SAND)
- BORROW AREA 0–5' AND 10'–15'(0–5' OVERLAP 10'–15'), (5'–10' OVERBURDEN < 70% SAND)

## GENERAL NOTES

1) THE RECOMMENDED BORROW AREAS ARE CROSS-HATCHED ON SHEETS 8 – 11 OF THE DRAWINGS. THE LOCATION OF VIBRACORES TAKEN IN 1987 ARE SHOWN ON SHEET 11. RECENT SAND VERIFICATION CORES TAKEN 1994 ARE ALSO SHOWN ON SHEET 11. LOGS OF THESE VIBRACORES AND SAND VERIFICATION CORES ARE AVAILABLE UPON REQUEST. BASED ON THE INFORMATION GIVEN IN THESE DRAWINGS THE CONTRACTOR SHALL DEVELOP A DREDGING PLAN TO BE APPROVED BY THE DNR ENGINEER. IN NO CASE HOWEVER SHALL THE CONTRACTOR DREDGE DEEPER THAN 15 FEET BELOW THE EXISTING BOTTOM WITHOUT PRIOR WRITTEN AUTHORIZATION FROM THE DNR ENGINEER OR DNR PROJECT MANAGER.

2) THE CONTRACTOR SHALL BE RESPONSIBLE FOR NAVIGATING WITHIN THE LIMITS OF THE DREDGE PLAN AREA. THE ENGINEERS PROJECT REPRESENTATIVE SHALL MONITOR THE LOCATION DURING CONSTRUCTION.

3) THE CONTRACTOR SHALL BE RESPONSIBLE FOR NOTIFYING PIPELINE OPERATORS 48 HOURS IN ADVANCE OF THE WORK. ALL PIPELINES SHALL BE MARKED WITH BUOYS BY THE CONTRACTOR WITH ASSISTANCE FROM THE PIPELINE OPERATOR. THE CONTRACTOR SHALL MAINTAIN BUOYS DURING CONSTRUCTION OR HAVE ADEQUATE NAVIGATIONAL EQUIPMENT ON THE DREDGE TO AVOID DREDGING IN RESTRICTED AREAS. THE FOLLOWING IS A LIST OF PIPELINE OPERATORS KNOWN TO HAVE PIPELINES IN THE VICINITY. THE CONTRACTOR SHALL USE DOTTIE TO DETERMINE WHETHER THERE ARE OTHERS. DO NOT DREDGE WITHIN 100' OF A PIPELINE.

| OPERATOR | SIZE | PHONE | CONTACT PERSON | ADDRESS |
|---|---|---|---|---|
| TENNESSEE GAS PIPELINE | 26" | (504) 879-3516 | H.S. MILLS | 224 AVIATION RD. |
| TENNESSEE GAS PIPELINE | 36" | (504) 879-3516 | H.S. MILLS | 224 AVIATION RD. |
| TEXAS GAS TRANSMISSION | 8" & 2" | (504) 831-0186 | RAYMOND BREAUX | BOX 299 AMELIA, LA. |
| BOIS D'ARC/EAGLE CONSULTING | 6" | (504) 631-3278 | JAMES CHAFIN | BOX 516 GIBSON, LA. |

4) OYSTER LEASES ARE IN THE VICINITY OF THE WORK. THE CONTRACTOR SHALL NOT DREDGE OR DISTURB BOTTOM WITHIN THE LIMIT OF OYSTER LEASES SHOWN ON THE DRAWING AND NOT DIRECTLY AFFECTED BY THE WORK. LEASES ARE LISTED BELOW.

| LEASE NO. | LESEE | PHONE | CONTACT PERSON | STATUS | LEASE NO. | LESEE | PHONE | CONTACT PERSON | STATUS |
|---|---|---|---|---|---|---|---|---|---|
| L-24467 | M.P. MARIE | – | M.P. MARIE | EXPIRED | L-31063-66 | TIDELAND SEAFOOD | (504) 594-5615 | – | ACTIVE |
| L-27249 | WILLARD THIBODEAUX | (504) 594-5615 | WILLARD THIBODEAUX | ACTIVE | L-31917-24 | TIDELAND SEAFOOD | (504) 594-5615 | – | ACTIVE |
| L-27199 | TIDELAND SEAFOOD | (504) 563-4516 | – | ACTIVE | L-34900 | TIDELAND SEAFOOD | (504) 563-4516 | – | ACTIVE |
| L-27202 | TIDELAND SEAFOOD | (504) 563-4516 | – | ACTIVE | L-34196 | P.B.S. INC. | – | – | ACTIVE |
| L-27203 | TIDELAND SEAFOOD | (504) 563-4516 | – | ACTIVE | L-34382 | P.B.S. INC. | – | – | ACTIVE |
| L-27206 | TIDELAND SEAFOOD | (504) 563-4516 | – | ACTIVE | L-34561 | JUDITH GIBSON | – | – | ACTIVE |
| L-27210 | TIDELAND SEAFOOD | (504) 563-4516 | – | ACTIVE | | | | | |
| L-31060 | TIDELAND SEAFOOD | (504) 563-4516 | – | ACTIVE | | | | | |

5) SAND SOURCE INFORMATION TAKEN FROM A 1987 SURVEY DONE BY OCEAN SURVEYS, INC. FURNISHED BY LOUISIANA DEPARTMENT OF NATURAL RESOURCES.

6) VOLUMES SHOWN ARE FOR BIDDING PURPOSES ONLY AND WERE CALCULATED ACCORDING TO CONDITIONS SURVEYED IN JUNE 1997. BEFORE AND AFTER DREDGING, CROSS-SECTIONS WILL BE SURVEYED BY THE CONTRACTOR FOR MEASUREMENT AND PAYMENT PURPOSES. ALL SURVEY WORK PERFORMED BY CONTRACTOR FOR MEASUREMENT AND PAYMENT WILL BE MONITORED BY THE ENGINEER. THE ENGINEER SHALL REVIEW ALL BEFORE AND AFTER SURVEY CROSS-SECTIONS AND MEASUREMENTS AND PAYMENT CALCULATIONS. IF A DISCREPANCY CANNOT BE RESOLVED THE ENGINEER SHALL PERFORM A CROSS-SECTION SURVEY TO VERIFY THE CONTRACTORS WORK.

7.) WHISKEY ISLAND IS A WILDLIFE REFUGE UNDER THE JURISDICTION OF THE LOUISIANA DEPT. OF WILDLIFE AND FISHERIES FUR AND REFUGE DIVISION. WORK IS PERMITTED ON THE ISLAND DURING BIRD NESTING SEASON WHICH OCCURS BETWEEN MARCH AND SEPTEMBER. ACCESS TO THE ISLAND IS LIMITED TO THE PROJECT BOUNDARIES DURING CONSTRUCTION. CONTACT LDWF/FRD AT (318) 373-0032 FOR SPECIAL ACCESS PERMISSION.

[redacted]

Ref: T. Baker Smith and Sons "Plans of Proposed Isle Dernieres Restoration Projects East Island (Phase 0) Trinity Island (Phase 1)" Dated August,97, Sheets 1 Through 48.

| DATE | REVISIONS | APPROVED |
|---|---|---|
| | | |
| | | |
| | | |
| | | |

STATE OF LOUISIANA
D. BRIAN KENDRICK
REG. No. 24067
REGISTERED
PROFESSIONAL ENGINEER
IN
CIVIL ENGINEERING
11/4/98

DRAWN BY: HJT/JDF
APPROVED BY: DBK/ALL
DATE : 10/7/97
SCALE : AS SHOWN

STATE OF LOUISIANA
DEPARTMENT OF NATURAL RESOURCES
COASTAL RESTORATION DIVISION
NICHOLLS STATE UNIVERSITY
P.O. BOX 2079
THIBODAUX, LOUISIANA 70310

WHISKEY ISLAND RESTORATION
PROJECT – PHASE 3b
TE-27 / PTE15bii

SUMMARY OF ESTIMATED QUANTITIES, CIVIL LEGEND, AND GENERAL NOTES

| FEDERAL PROJECT NO. | STATE PROJECT NOS. | PARISH | SHEET NO. |
|---|---|---|---|
| PTE15bii | TE-27 | TERREBONNE | 3 |

Ref: Picciola and Associates Survey Drawings "Hydrographic and Topographic Survey, Whiskey Island Restoration Project Part1 (TE-27/PTE15bii), Terrebonne Parish, LA" Dated 8/14/97, Sheets 1-13.

| DATE | REVISIONS | APPROVED |
|---|---|---|
| | | |
| | | |
| | | |
| | | |

STATE OF LOUISIANA
D. BRIAN KENDRICK
REG. No. 24672
REGISTERED
PROFESSIONAL ENGINEER
IN
CIVIL ENGINEERING
11/6/98

| | |
|---|---|
| DRAWN BY: | HJT/JDF |
| APPROVED BY: | DBK/ALL |
| DATE : | 10/7/97 |
| SCALE : | 1" = 400' |

STATE OF LOUISIANA
DEPARTMENT OF NATURAL RESOURCES
COASTAL RESTORATION DIVISION
NICHOLLS STATE UNIVERSITY
P.O. BOX 2079
THIBODAUX, LOUISIANA 70310

WHISKEY ISLAND RESTORATION
PROJECT - PHASE 3b
TE-27 / PTE15bii

PROJECT AREA
TOPOGRAPHIC SURVEY

| FEDERAL PROJECT NO. | STATE PROJECT NOS. | PARISH | SHEET NO. |
|---|---|---|---|
| PTE15bii | TE-27 | TERREBONNE | 4 |

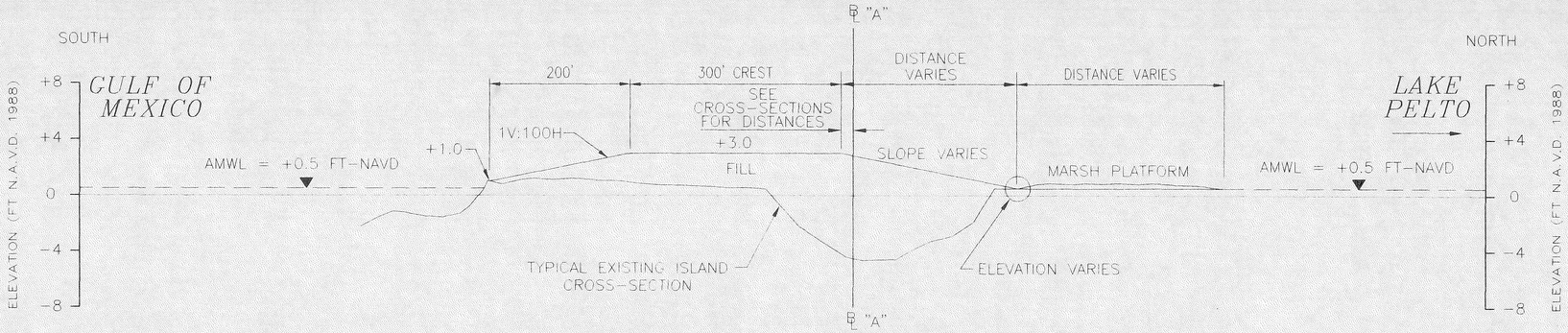


## COUPE NOUVELLE CONTAINMENT AREA DESIGN CROSS-SECTION TEMPLATE

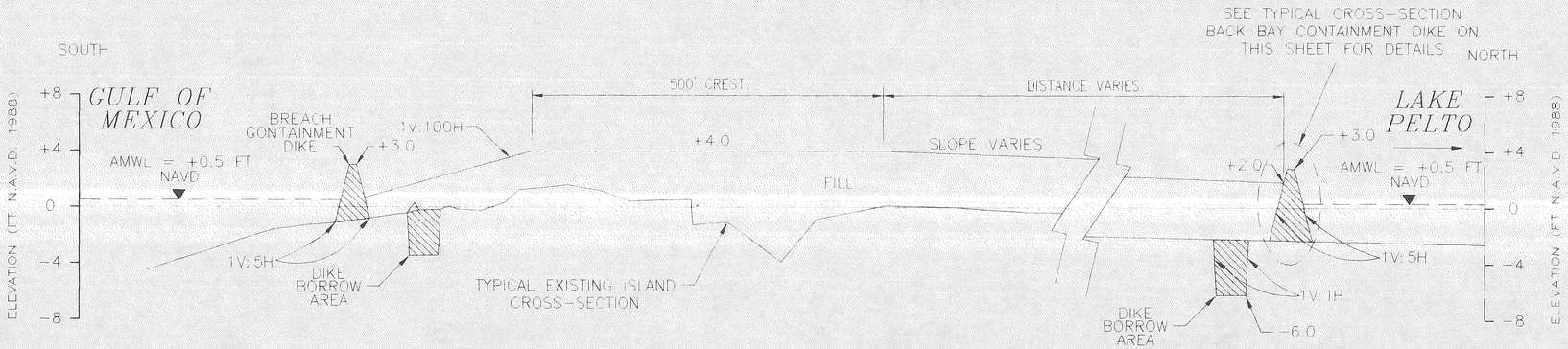


## BACK BAY AND BREACH CONTAINMENT AREA DESIGN CROSS-SECTION TEMPLATE

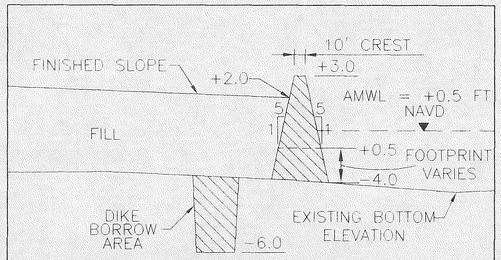


COUPE NOUVELLE' EARTH CONTAINMENT DIKE TYPICAL CROSS-SECTION

(NOT TO SCALE)

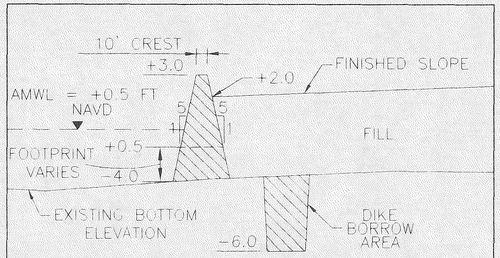


BREACH CONTAINMENT DIKE TYPICAL CROSS-SECTION

(NOT TO SCALE)

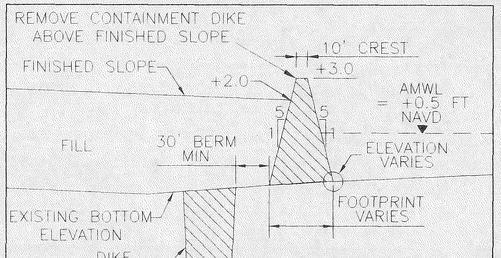


BACK BAY CONTAINMENT DIKE TYPICAL CROSS-SECTION

(NOT TO SCALE)

[redacted]

Ref: Picciola and Associates Survey Drawings "Hydrographic and Topographic Survey, Whiskey Island Restoration Project Part1 (TE-27/PTE15bii), Terrebonne Parish, LA" Dated 8/14/97, Sheets 1-13.

| DATE | REVISIONS | APPROVED |
|---|---|---|
| | | |
| | | |
| | | |
| | | |

STATE OF LOUISIANA D. BRIAN KENDRICK REG. No. 24972 REGISTERED PROFESSIONAL ENGINEER IN CIVIL ENGINEERING 10/6/97

| | |
|---|---|
| DRAWN BY: | HJT/JDF |
| APPROVED BY: | DBK/ALL |
| DATE | 10/7/97 |
| SCALE | HORZ. 1" = 100' VERT. 1" = 5' |

STATE OF LOUISIANA
DEPARTMENT OF NATURAL RESOURCES
COASTAL RESTORATION DIVISION
NICHOLLS STATE UNIVERSITY
P.O. BOX 2079
THIBODAUX, LOUISIANA 70310

WHISKEY ISLAND RESTORATION
PROJECT - PHASE 3b
TE-27 / PTE15bii

TYPICAL CROSS-SECTIONS & EROSION PROTECTION DETAILS

| FEDERAL PROJECT NO. | STATE PROJECT NOS. | PARISH | SHEET NO. |
|---|---|---|---|
| PTE15bii | TE-27 | TERREBONNE | 5 |

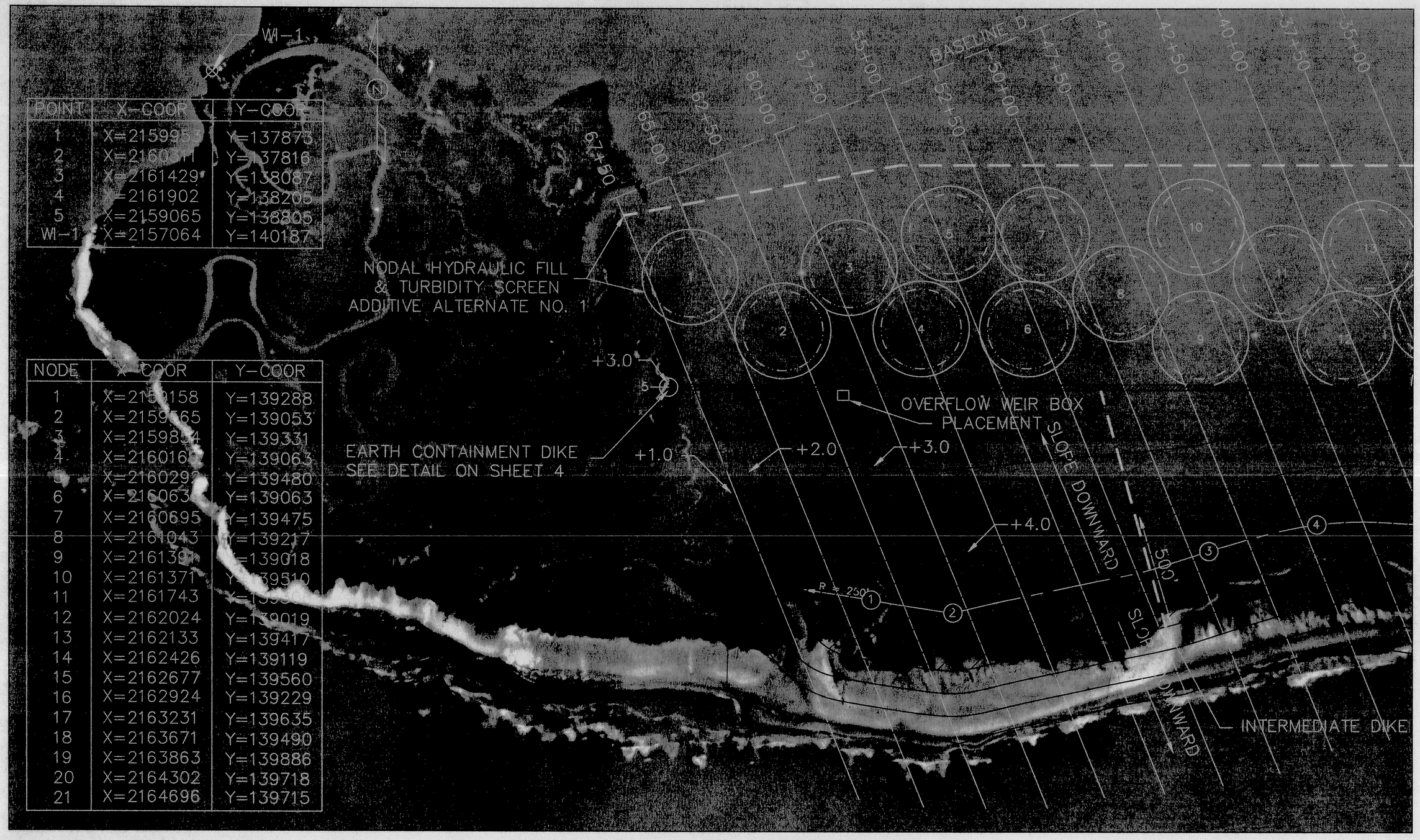


| POINT | X-COOR | Y-COOR |
|---|---|---|
| 1 | X=2159995 | Y=137873 |
| 2 | X=2160[illegible] | Y=137816 |
| 3 | X=2161429 | Y=138087 |
| 4 | X=2161902 | Y=138205 |
| 5 | X=2159065 | Y=138805 |
| WI-1 | X=2157064 | Y=140187 |

| NODE | X-COOR | Y-COOR |
|---|---|---|
| 1 | X=2159158 | Y=139288 |
| 2 | X=2159565 | Y=139053 |
| 3 | X=2159834 | Y=139331 |
| 4 | X=2160163 | Y=139063 |
| 5 | X=2160292 | Y=139480 |
| 6 | X=2160630 | Y=139063 |
| 7 | X=2160695 | Y=139475 |
| 8 | X=2161043 | Y=139217 |
| 9 | X=2161391 | Y=139018 |
| 10 | X=2161371 | Y=139510 |
| 11 | X=2161743 | Y=139[illegible] |
| 12 | X=2162024 | Y=139019 |
| 13 | X=2162133 | Y=139417 |
| 14 | X=2162426 | Y=139119 |
| 15 | X=2162677 | Y=139560 |
| 16 | X=2162924 | Y=139229 |
| 17 | X=2163231 | Y=139635 |
| 18 | X=2163671 | Y=139490 |
| 19 | X=2163863 | Y=139886 |
| 20 | X=2164302 | Y=139718 |
| 21 | X=2164696 | Y=139715 |

400 0 400 800 1200

SCALE: 1" = 200'

Ref: Picciola and Associates Survey Drawings "Hydrographic and Topographic Survey, Whiskey Island Restoration Project Part1 (TE-27/PTE15bii), Terrebonne Parish, LA" Dated 8/14/97, Sheets 1-13.

| DATE | REVISIONS | APPROVED |
|---|---|---|
| | | |
| | | |
| | | |
| | | |

STATE OF LOUISIANA
D. BRIAN KENDRICK
REG. No. 24072
REGISTERED
PROFESSIONAL ENGINEER
IN
CIVIL ENGINEERING
D. Brian Kendrick 11/6/98

DRAWN BY: HJT/JDF
APPROVED BY: DBK/ALL
DATE : 10/7/97
SCALE : 1" = 200'

STATE OF LOUISIANA
DEPARTMENT OF NATURAL RESOURCES
COASTAL RESTORATION DIVISION
NICHOLLS STATE UNIVERSITY
P.O. BOX 2079
THIBODAUX, LOUISIANA 70310

WHISKEY ISLAND RESTORATION
PROJECT - PHASE 3b
TE-27 / PTE15bii

PROJECT LAYOUT AERIAL

| FEDERAL PROJECT NO. | STATE PROJECT NOS. | PARISH | SHEET NO. |
|---|---|---|---|
| PTE15bii | TE-27 | TERREBONNE | 6 |

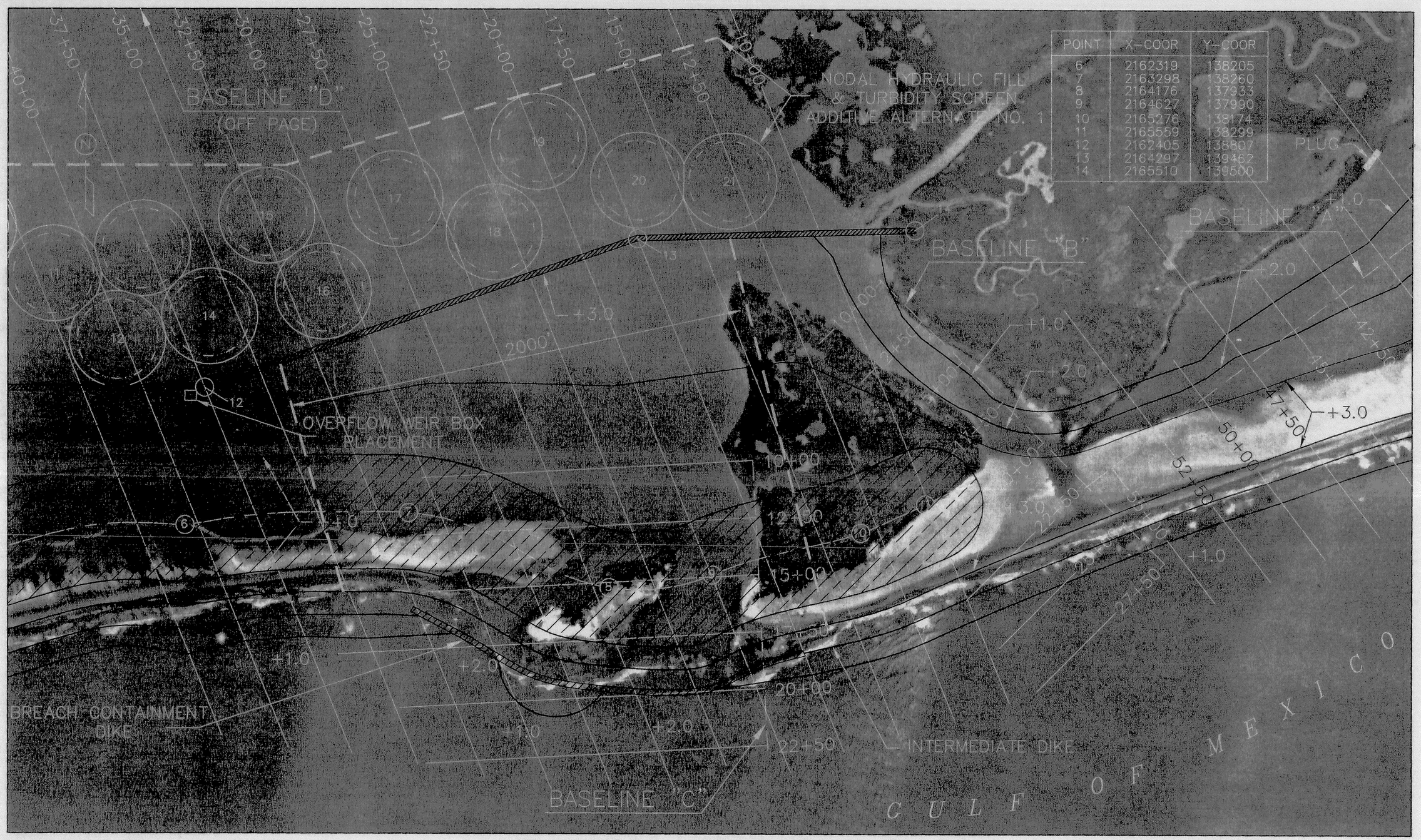


| POINT | X-COOR | Y-COOR |
|---|---|---|
| 6 | 2162319 | 138205 |
| 7 | 2163298 | 138260 |
| 8 | 2164176 | 137933 |
| 9 | 2164627 | 137990 |
| 10 | 2165276 | 138174 |
| 11 | 2165559 | 138299 |
| 12 | 2162405 | 138807 |
| 13 | 2164297 | 139462 |
| 14 | 2165510 | 139500 |

400 0 400 800 1200

SCALE: 1" = 200'

Ref: Picciola and Associates Survey Drawings "Hydrographic and Topographic Survey, Whiskey Island Restoration Project Part1 (TE-27/PTE15bii), Terrebonne Parish, LA" Dated 8/14/97, Sheets 1-13.

| DATE | REVISIONS | APPROVED |
|---|---|---|
| | | |
| | | |
| | | |
| | | |

STATE OF LOUISIANA
D. BRIAN KENDRICK
REG. No. 24072
REGISTERED
PROFESSIONAL ENGINEER
IN
CIVIL ENGINEERING
1/6/98

DRAWN BY: HJT/JDF
APPROVED BY: DBK/ALL
DATE : 10/7/97
SCALE : 1" = 200'

STATE OF LOUISIANA
DEPARTMENT OF NATURAL RESOURCES
COASTAL RESTORATION DIVISION
NICHOLLS STATE UNIVERSITY
P.O. BOX 2079
THIBODAUX, LOUISIANA 70310

WHISKEY ISLAND RESTORATION
PROJECT - PHASE 3b
TE-27 / PTE15bii

PROJECT LAYOUT AERIAL

| FEDERAL PROJECT NO. | STATE PROJECT NOS. | PARISH | SHEET NO. |
|---|---|---|---|
| PTE15bii | TE-27 | TERREBONNE | 7 |

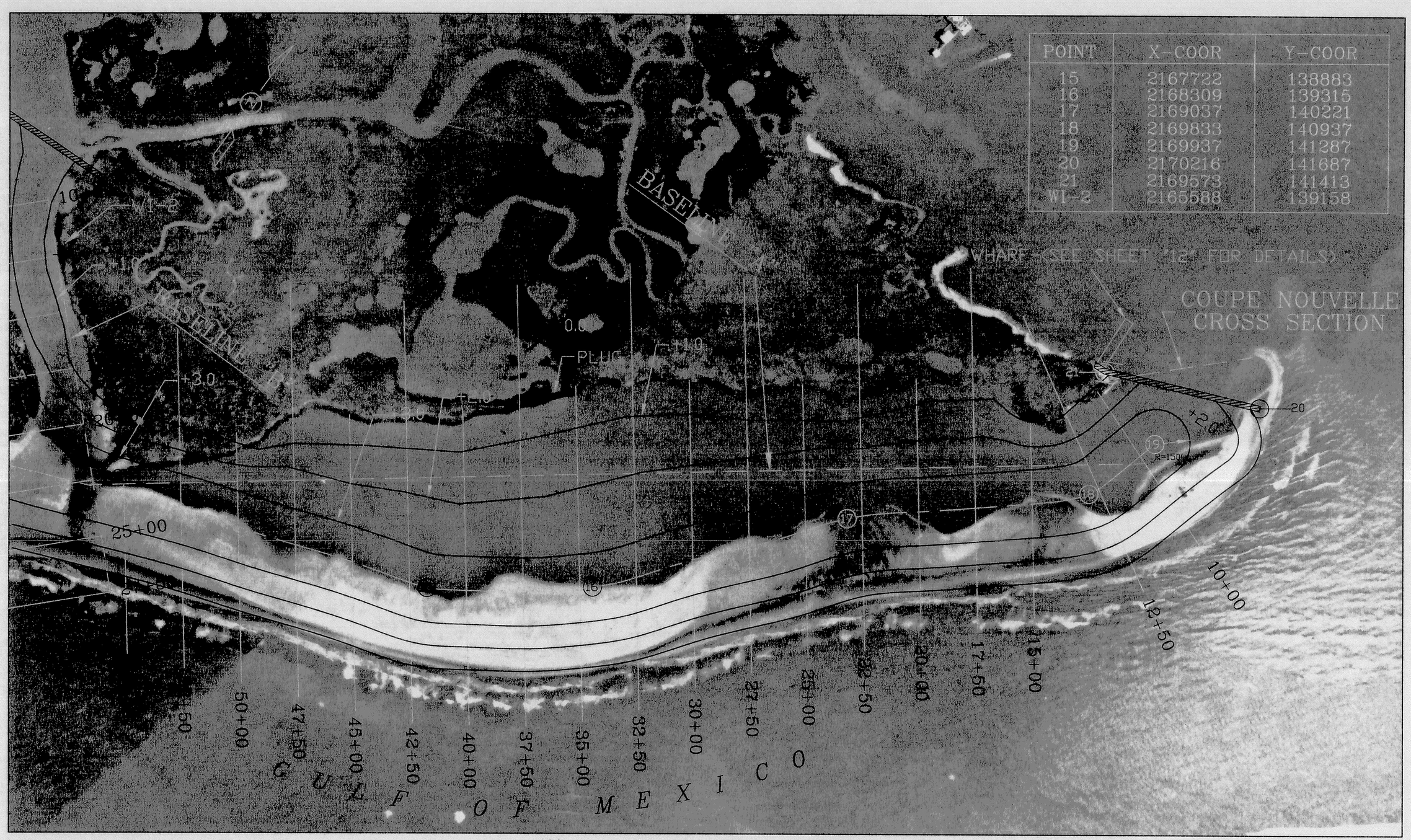


| POINT | X-COOR | Y-COOR |
|---|---|---|
| 15 | 2167722 | 138883 |
| 16 | 2168309 | 139315 |
| 17 | 2169037 | 140221 |
| 18 | 2169833 | 140937 |
| 19 | 2169937 | 141287 |
| 20 | 2170216 | 141687 |
| 21 | 2169573 | 141413 |
| WI-2 | 2165588 | 139158 |

SCALE: 1" = 200'

Ref: Picciola and Associates Survey Drawings "Hydrographic and Topographic Survey, Whiskey Island Restoration Project Part1 (TE-27/PTE15bii), Terrebonne Parish, LA" Dated 8/14/97, Sheets 1-13.

| DATE | REVISIONS | APPROVED |
|---|---|---|
| | | |
| | | |
| | | |
| | | |

STATE OF LOUISIANA
D. BRIAN KENDRICK
REG. No. 24672
REGISTERED
PROFESSIONAL ENGINEER
IN
CIVIL ENGINEERING
10/6/97

| | |
|---|---|
| DRAWN BY: | HJT/JDF |
| APPROVED BY: | DBK/ALL |
| DATE : | 10/7/97 |
| SCALE : | 1" = 200' |

STATE OF LOUISIANA
DEPARTMENT OF NATURAL RESOURCES
COASTAL RESTORATION DIVISION
NICHOLLS STATE UNIVERSITY
P.O. BOX 2079
THIBODAUX, LOUISIANA 70310

WHISKEY ISLAND RESTORATION
PROJECT - PHASE 3b
TE-27 / PTE15bii

PROJECT LAYOUT AERIAL

| FEDERAL PROJECT NO. | STATE PROJECT NOS. | PARISH | SHEET NO. |
|---|---|---|---|
| PTE15bii | TE-27 | TERREBONNE | 8 |

## 0-5 FEET SAND SOURCE F COORDINATES

| | POINT | X | Y |
|---|---|---|---|
| F-1 | 1 | 2175001.03 | 140874.14 |
| | 2 | 2176415.93 | 141251.56 |
| | 3 | 2178505.03 | 139893.39 |
| | 4 | 2178892.15 | 140388.04 |
| | 5 | 2179136.84 | 141277.82 |
| | 6 | 2181048.63 | 142586.63 |
| | 7 | 2180592.03 | 141380.52 |
| | 8 | 2179984.93 | 139315.77 |
| | 9 | 2175005.39 | 139315.77 |
| F-2 | 10 | 2181564.66 | 143068.14 |
| | 11 | 2181979.34 | 143278.00 |
| | 12 | 2182463.40 | 143297.79 |
| | 13 | 2183243.19 | 142815.52 |
| | 14 | 2183628.12 | 142848.29 |
| | 15 | 2184268.71 | 143389.54 |
| | 16 | 2185113.55 | 144641.68 |
| | 17 | 2185795.55 | 144434.39 |
| | 18 | 2184547.83 | 141365.75 |
| | 19 | 2181393.36 | 142648.36 |
| F-3 | 20 | 2175020.75 | 144576.14 |
| | 21 | 2175682.53 | 144576.14 |
| | 22 | 2175493.95 | 143945.75 |
| | 23 | 2175293.97 | 143641.91 |
| | 24 | 2175020.75 | 143426.63 |
| F-4 | 25 | 2176916.15 | 144583.46 |
| | 26 | 2178810.81 | 144591.42 |
| | 27 | 2178347.01 | 143246.92 |
| | 28 | 2177652.00 | 143177.95 |
| | 29 | 2177252.75 | 143527.72 |

| 0-5 FEET SAND SOURCE | > 70% AREA (SQ. FT.) | > 70% VOLUME (CU. YDS.) |
|---|---|---|
| | SAND SOURCE F | SAND SOURCE F |
| F-1 | 8,948,501 | 1,657,130 |
| F-2 | 5,406,362 | 1,001,178 |
| F-3 | 500,546 | 92,694 |
| F-4 | 1,937,517 | 358,799 |
| | | |
| TOTAL | 16,792,926 | 3,109,801 |

## NOTES:

1) SAND CONTOUR INFORMATION SHOWN ON THIS DRAWING PROVIDED BY LOUISIANA DEPARTMENT OF NATURAL RESOURCES.
2) CONTOURS SHOWN ARE PERCENTAGES OF SAND BY VOLUME.
3) CONTRACTOR TO VERIFY AND MARK LOCATION OF PIPELINES AND OYSTER LEASES BEFORE DREDGING.
4) CONTRACTOR MAY NOT USE THIS BORROW AREA UNLESS AUTHORIZED IN WRITING BY DNR PROJECT MANAGER.

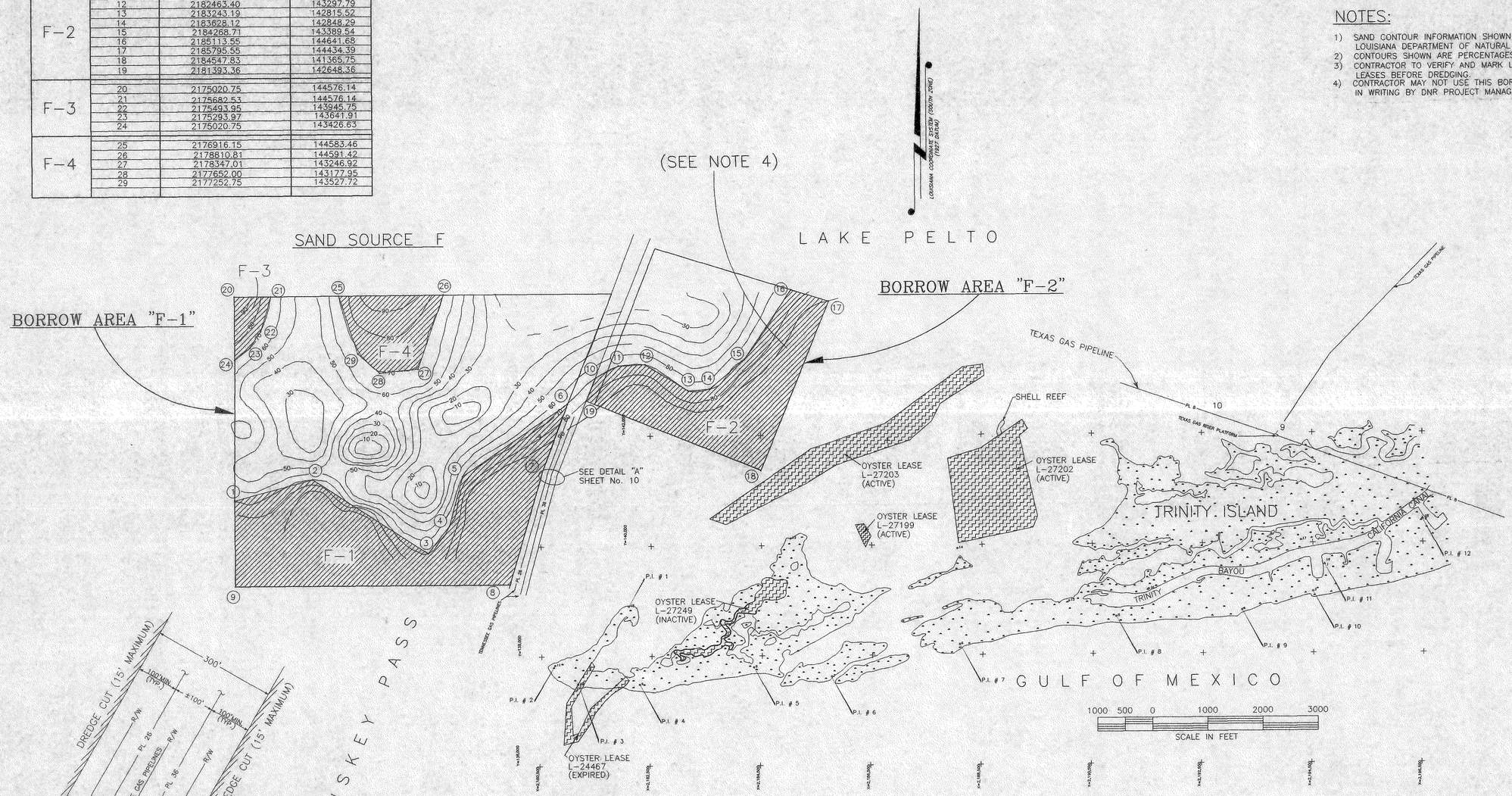


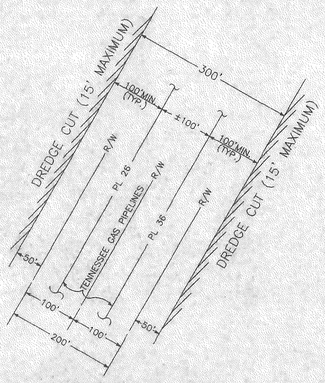


DETAIL "A"
NOT TO SCALE

REFERENCE MAP PAGES 7 & 8 OF A SET OF PLANS ENTITLED "STATE OF LOUISIANA DEPARTMENT OF TRANSPORTATION AND DEVELOPMENT OFFICE OF PUBLIC WORKS PLANS OF PROPOSED EAST ISLE DERNIERES RESTORATION S.P. No. 750-55-01 TERREBONNE PARISH" BY PLAISANCE/SMITH ENGINEERS, DATED 07/21/88

[redacted]

Ref: T. Baker Smith & Son, Inc. Construction Drawings "Isle Dernieres Restoration Projects, East Island (Phase 0) and Trinity Island (Phase 1), Terrebonne Parish, LA, Dated 9/5/97, Sheets 14-17.

| DATE | REVISIONS | APPROVED |
|---|---|---|
| | | |
| | | |
| | | |
| | | |

STATE OF LOUISIANA
D. BRIAN KENDRICK
REG. No. 24872
PROFESSIONAL ENGINEER IN CIVIL ENGINEERING
1/6/98

| | |
|---|---|
| DRAWN BY: | HJT/JDF |
| APPROVED BY: | DBK/ALL |
| DATE : | 10/7/97 |
| SCALE : | 1" = 1000' |

STATE OF LOUISIANA
DEPARTMENT OF NATURAL RESOURCES
COASTAL RESTORATION DIVISION
NICHOLLS STATE UNIVERSITY
P.O. BOX 2079
THIBODAUX, LOUISIANA 70310

WHISKEY ISLAND RESTORATION
PROJECT - PHASE 3b
TE-27 / PTE15bii

SAND SOURCE CONTOUR MAP
(0-5')

| FEDERAL PROJECT NO. | STATE PROJECT NOS. | PARISH | SHEET NO. |
|---|---|---|---|
| PTE15bii | TE-27 | TERREBONNE | 9 |

## 5-10 FEET SAND SOURCE F COORDINATES

| | POINT | X | Y |
|---|---|---|---|
| F-5 | 1 | 2175005.39 | 139315.77 |
| | 2 | 2175004.86 | 139504.06 |
| | 3 | 2175853.46 | 140457.60 |
| | 4 | 2176048.46 | 141153.54 |
| | 5 | 2176423.47 | 141246.66 |
| | 6 | 2176586.68 | 141140.55 |
| | 7 | 2176606.15 | 140819.49 |
| | 8 | 2177185.23 | 140533.50 |
| | 9 | 2177749.03 | 139315.77 |
| F-6 | 10 | 2178813.10 | 139315.77 |
| | 11 | 2178903.41 | 139855.71 |
| | 12 | 2178892.15 | 140388.04 |
| | 13 | 2179139.22 | 141286.50 |
| | 14 | 2181048.63 | 142586.63 |
| | 15 | 2180593.86 | 141385.34 |
| | 16 | 2179984.93 | 139315.77 |
| F-7 | 17 | 2181564.66 | 143068.14 |
| | 18 | 2181979.34 | 143278.00 |
| | 19 | 2182463.40 | 143297.79 |
| | 20 | 2182650.38 | 143188.22 |
| | 21 | 2183119.60 | 142362.91 |
| | 22 | 2183576.85 | 142455.28 |
| | 23 | 2183723.20 | 142928.62 |
| | 24 | 2184268.71 | 143389.54 |
| | 25 | 2184591.20 | 143867.17 |
| | 26 | 2185518.06 | 143754.58 |
| | 27 | 2184551.22 | 141374.08 |
| | 28 | 2181393.36 | 142648.36 |

| 5-10 FEET SAND SOURCE | > 70% AREA (SQ. FT.) | > 70% VOLUME (CU. YDS.) |
|---|---|---|
| | SAND SOURCE F | SAND SOURCE F |
| F-5 | 3,031,612.18 | 561,410 |
| F-6 | 3,550,943.30 | 657,582 |
| F-7 | 4,396,335.87 | 814,136 |
| | | |
| TOTAL | 10,978,891.35 | 2,033,128 |

## NOTES:

1) SAND CONTOUR INFORMATION SHOWN ON THIS DRAWING PROVIDED BY LOUISIANA DEPARTMENT OF NATURAL RESOURCES.
2) CONTOURS SHOWN ARE PERCENTAGES OF SAND BY VOLUME.
3) CONTRACTOR TO VERIFY AND MARK LOCATION OF PIPELINES AND OYSTER LEASES BEFORE DREDGING.
4) CONTRACTOR MAY NOT USE THIS BORROW AREA UNLESS AUTHORIZED IN WRITING BY DNR PROJECT MANAGER.

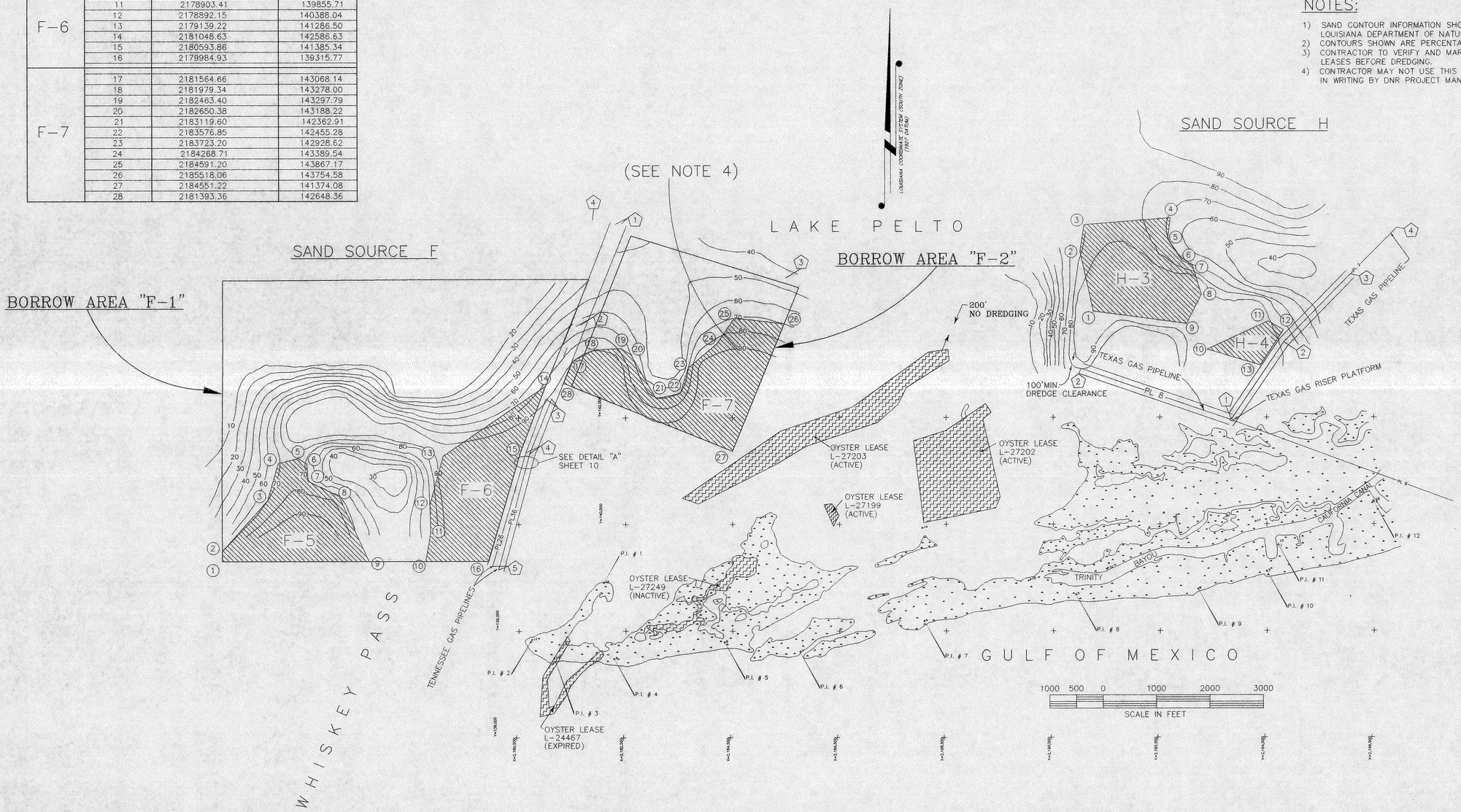


## COORDINATES FOR GAS PIPELINES

| POINT | X | Y |
|---|---|---|
| 36"TENNESSEE GAS PIPELINE | | |
| 1 | 2182482 | 145633 |
| 2 | 2181711 | 143737 |
| 3 | 2181168 | 142359 |
| 4 | 2180757 | 141327 |
| 5 | 2180173 | 139154 |
| 26"TENNESSEE GAS PIPELINE | | |
| 1 | 2182366 | 145626 |
| 2 | 2181631 | 143714 |
| 3 | 2181061 | 142358 |
| 4 | 2180687 | 141349 |
| 5 | 2180061 | 139220 |
| 8"TEXAS GAS PIPELINE | | |
| 1 | 2193873 | 141956 |
| 2 | 2191076 | 142912 |
| 3 | 2185549 | 144615 |
| 4 | 2181939 | 145702 |
| 2"TEXAS GAS PIPELINE | | |
| 1 | 2193951 | 142049 |
| 2 | 2194874 | 143406 |
| 3 | 2196120 | 144678 |
| 4 | 2196990 | 145547 |

REFERENCE MAP PAGES 7 & 8 OF A SET OF PLANS ENTITLED "STATE OF LOUISIANA DEPARTMENT OF TRANSPORTATION AND DEVELOPMENT OFFICE OF PUBLIC WORKS PLANS OF PROPOSED EAST ISLE DERNIERES RESTORATION S.P. No. 750-55-01 TERREBONNE PARISH" BY PLAISANCE/SMITH ENGINEERS, DATED 07/21/88

[redacted]

Ref: T. Baker Smith & Son, Inc. Construction Drawings "Isle Dernieres Restoration Projects, East Island (Phase 0) and Trinity Island (Phase 1), Terrebonne Parish, LA, Dated 9/5/97, Sheets 14-17.

| DATE | REVISIONS | APPROVED |
|---|---|---|
| | | |

STATE OF LOUISIANA
D. BRIAN KLINDRICK
REG. No. 24072
PROFESSIONAL ENGINEER IN CIVIL ENGINEERING
1/6/98

| | |
|---|---|
| DRAWN BY | HJT/JDF |
| APPROVED BY | DBK/ALL |
| DATE | 10/7/97 |
| SCALE | 1" = 1000' |

STATE OF LOUISIANA
DEPARTMENT OF NATURAL RESOURCES
COASTAL RESTORATION DIVISION
NICHOLLS STATE UNIVERSITY
P.O. BOX 2079
THIBODAUX, LOUISIANA 70310

WHISKEY ISLAND RESTORATION
PROJECT - PHASE 3b
TE-27 / PTE15bii

SAND SOURCE CONTOUR MAP
(5-10')

| FEDERAL PROJECT NO. | STATE PROJECT NOS. | PARISH | SHEET NO. |
|---|---|---|---|
| PTE15bii | TE-27 | TERREBONNE | 10 |

| 10-15 FEET SAND SOURCE F COORDINATES | | | |
|---|---|---|---|
| | POINT | X | Y |
| F-8 | 1 | 2175005.39 | 139315.77 |
| | 2 | 2175004.86 | 139504.06 |
| | 3 | 2175290.39 | 139824.90 |
| | 4 | 2175960.23 | 140146.85 |
| | 5 | 2176345.40 | 140487.35 |
| | 6 | 2176958.64 | 140645.41 |
| | 7 | 2177185.23 | 140533.50 |
| | 8 | 2177749.03 | 139315.77 |
| F-9 | 9 | 2178813.10 | 139315.77 |
| | 10 | 2178903.41 | 139855.71 |
| | 11 | 2178892.15 | 140388.04 |
| | 12 | 2179139.22 | 141286.50 |
| | 13 | 2181048.63 | 142586.63 |
| | 14 | 2180591.06 | 141377.21 |
| | 15 | 2179984.93 | 139315.77 |
| F-10 | 16 | 2181564.66 | 143068.14 |
| | 17 | 2181979.34 | 143278.00 |
| | 18 | 2182463.40 | 143297.79 |
| | 19 | 2182650.38 | 143188.22 |
| | 20 | 2183119.60 | 142362.91 |
| | 21 | 2183576.85 | 142455.28 |
| | 22 | 2183723.20 | 142928.62 |
| | 23 | 2184268.71 | 143389.54 |
| | 24 | 2184591.20 | 143867.17 |
| | 25 | 2185518.06 | 143754.58 |
| | 26 | 2184551.22 | 141374.08 |
| | 27 | 2181393.36 | 142648.36 |

| 10-15 FEET SAND SOURCE | > 70% AREA (SQ. FT.) | > 70% VOLUME (CU. YDS.) |
|---|---|---|
| | SAND SOURCE F | SAND SOURCE F |
| F-8 | 2,332,877 | 432,014 |
| F-9 | 3,550,943 | 657,582 |
| F-10 | 4,129,030 | 764,635 |
| | | |
| TOTAL | 10,012,850 | 1,854,231 |

## NOTES:

1) SAND CONTOUR INFORMATION SHOWN ON THIS DRAWING PROVIDED BY LOUISIANA DEPARTMENT OF NATURAL RESOURCES.
2) CONTOURS SHOWN ARE PERCENTAGES OF SAND BY VOLUME.
3) CONTRACTOR TO VERIFY AND MARK LOCATION OF PIPELINES AND OYSTER LEASES BEFORE DREDGING.
4) CONTRACTOR MAY NOT USE THIS BORROW AREA UNLESS AUTHORIZED IN WRITING BY DNR PROJECT MANAGER.

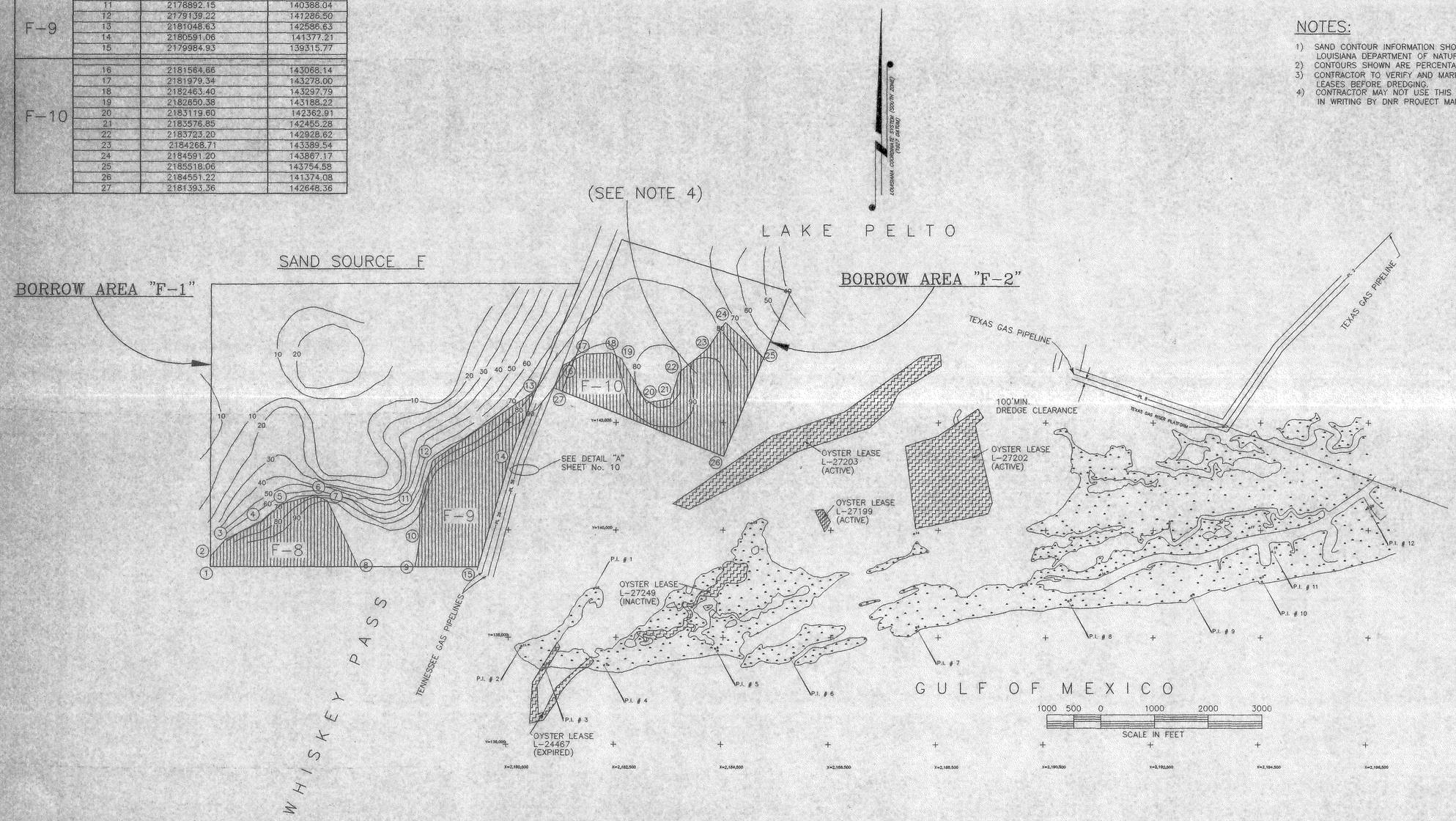


REFERENCE MAP PAGES 7 & 8 OF A SET OF PLANS ENTITLED "STATE OF LOUISIANA DEPARTMENT OF TRANSPORTATION AND DEVELOPMENT OFFICE OF PUBLIC WORKS PLANS OF PROPOSED EAST ISLE DERNIERES RESTORATION S.P. No. 750-55-01 TERREBONNE PARISH" BY PLAISANCE/SMITH ENGINEERS, DATED 07/21/88

[redacted]

Ref: T. Baker Smith & Son, Inc. Construction Drawings "Isle Dernieres Restoration Projects, East Island (Phase 0) and Trinity Island (Phase 1), Terrebonne Parish, LA, Dated 9/5/97, Sheets 14-17.

| DATE | REVISIONS | APPROVED |
|---|---|---|
| | | |
| | | |
| | | |
| | | |

STATE OF LOUISIANA
D. BRIAN KENDRICK
REG. No. 24872
PROFESSIONAL ENGINEER IN CIVIL ENGINEERING
11/6/98

| | |
|---|---|
| DRAWN BY: | HJT/JDF |
| APPROVED BY: | DBK/ALL |
| DATE : | 10/7/97 |
| SCALE : | 1" = 1000' |

STATE OF LOUISIANA
DEPARTMENT OF NATURAL RESOUCRES
COASTAL RESTORATION DIVISION
NICHOLLS STATE UNIVERSITY
P.O. BOX 2079
THIBODAUX, LOUISIANA 70310

WHISKEY ISLAND RESTORATION
PROJECT - PHASE 3b
TE-27 / PTE15bii

SAND SOURCE CONTOUR MAP
(10-15')

| FEDERAL PROJECT NO. | STATE PROJECT NOS. | PARISH | SHEET NO. |
|---|---|---|---|
| PTE15bii | TE-27 | TERREBONNE | 11 |

## 0-5', 5-10' & 10-15'OVERLAY SAND SOURCE F1 COORDINATES

| POINT | X | Y |
|---|---|---|
| 1 | 2175005.39 | 139315.77 |
| 2 | 2175004.86 | 139504.06 |
| 3 | 2175290.39 | 139824.90 |
| 4 | 2175960.23 | 140146.85 |
| 5 | 2176345.40 | 140487.35 |
| 6 | 2176958.64 | 140645.41 |
| 7 | 2177185.23 | 140533.50 |
| 8 | 2177749.03 | 139315.77 |

## 0-5', 5-10' & 10-15'OVERLAY SAND SOURCE F2 COORDINATES

| POINT | X | Y |
|---|---|---|
| 9 | 2178813.10 | 139315.77 |
| 10 | 2178903.41 | 139855.71 |
| 11 | 2178892.15 | 140388.04 |
| 12 | 2179139.22 | 141286.50 |
| 13 | 2181048.63 | 142586.63 |
| 14 | 2180591.06 | 141377.21 |
| 15 | 2179984.93 | 139315.77 |

## 0-5', 5-10' & 10-15'OVERLAY SAND SOURCE F3 COORDINATES

| POINT | X | Y |
|---|---|---|
| 16 | 2181564.66 | 143068.14 |
| 17 | 2181979.34 | 143278.00 |
| 18 | 2182463.40 | 143297.79 |
| 19 | 2182650.38 | 143188.22 |
| 20 | 2183119.60 | 142362.91 |
| 21 | 2183576.85 | 142455.28 |
| 22 | 2183723.20 | 142928.62 |
| 23 | 2184268.71 | 143389.54 |
| 24 | 2184591.20 | 143867.17 |
| 25 | 2185518.06 | 143754.58 |
| 26 | 2184551.22 | 141374.08 |
| 27 | 2181393.36 | 142648.36 |

| 0-5', 5-10'& 10-15'OVERLAY SAND SOURCE | > 70% AREA (SQ. FT.) | > 70% VOLUME (CU. YDS.) |
|---|---|---|
| F1 | 2,332,877 | 1,296,043 |
| F2 | 3,550,943 | 1,972,746 |
| F3 | 4,129,030 | 2,293,905 |
| TOTAL: | 10,012,850 | 5,562,694 |

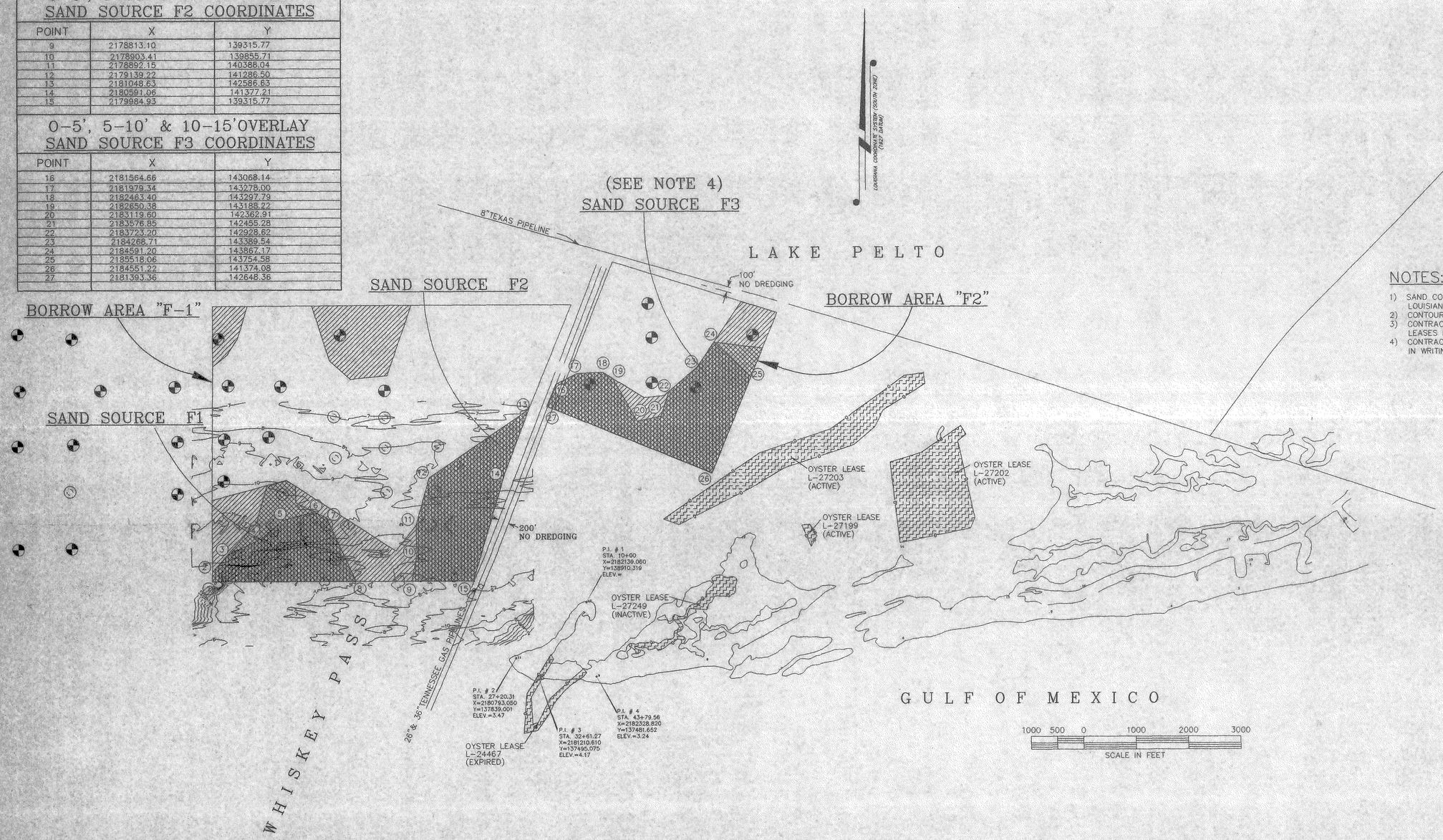


NOTES:

1) SAND CONTOUR INFORMATION SHOWN ON THIS DRAWING PROVIDED BY LOUISIANA DEPARTMENT OF NATURAL RESOURCES.
2) CONTOURS SHOWN ARE PERCENTAGES OF SAND BY VOLUME.
3) CONTRACTOR TO VERIFY AND MARK LOCATION OF PIPELINES AND OYSTER LEASES BEFORE DREDGING.
4) CONTRACTOR MAY NOT USE THIS BORROW AREA UNLESS AUTHORIZED IN WRITING BY DNR PROJECT MANAGER.

LEGEND:

- 0 - 5'
- 5' - 10'
- 10' - 15'
- CORE HOLE LOCATION
- OVERLAPPING STATION (0-5, 5-10, & 10-15)
- OVERLAPPING STATION (0-5 & 5-10)
- OVERLAPPING STATION (5-10 & 10-15)
- OVERLAPPING STATION (0-5 & 10-15)

[redacted]

Ref: T. Baker Smith & Son, Inc. Construction Drawings "Isle Dernieres Restoration Projects, East Island (Phase 0) and Trinity Island (Phase 1), Terrebonne Parish, LA, Dated 9/5/97, Sheets 14-17.

| DATE | REVISIONS | APPROVED |
|---|---|---|
| | | |

STATE OF LOUISIANA D. BRIAN KENDRICK REG. No. 24072 EXPIRES 1/1/98 PROFESSIONAL ENGINEER IN CIVIL ENGINEERING

DRAWN BY: HJT/JDF
APPROVED BY: DBK/ALL
DATE : 10/7/97
SCALE : 1" = 1000'

STATE OF LOUISIANA
DEPARTMENT OF NATURAL RESOURCES
COASTAL RESTORATION DIVISION
NICHOLLS STATE UNIVERSITY
P.O. BOX 2079
THIBODAUX, LOUISIANA 70310

WHISKEY ISLAND RESTORATION
PROJECT - PHASE 3b
TE-27 / PTE15bii

SAND SOURCE CONTOUR MAP
(0-5', 5-10' & 10-15' OVERLAY)

| FEDERAL PROJECT NO. | STATE PROJECT NO. | PARISH | SHEET NO. |
|---|---|---|---|
| PTE15bii | TE-27 | TERREBONNE | 12 |

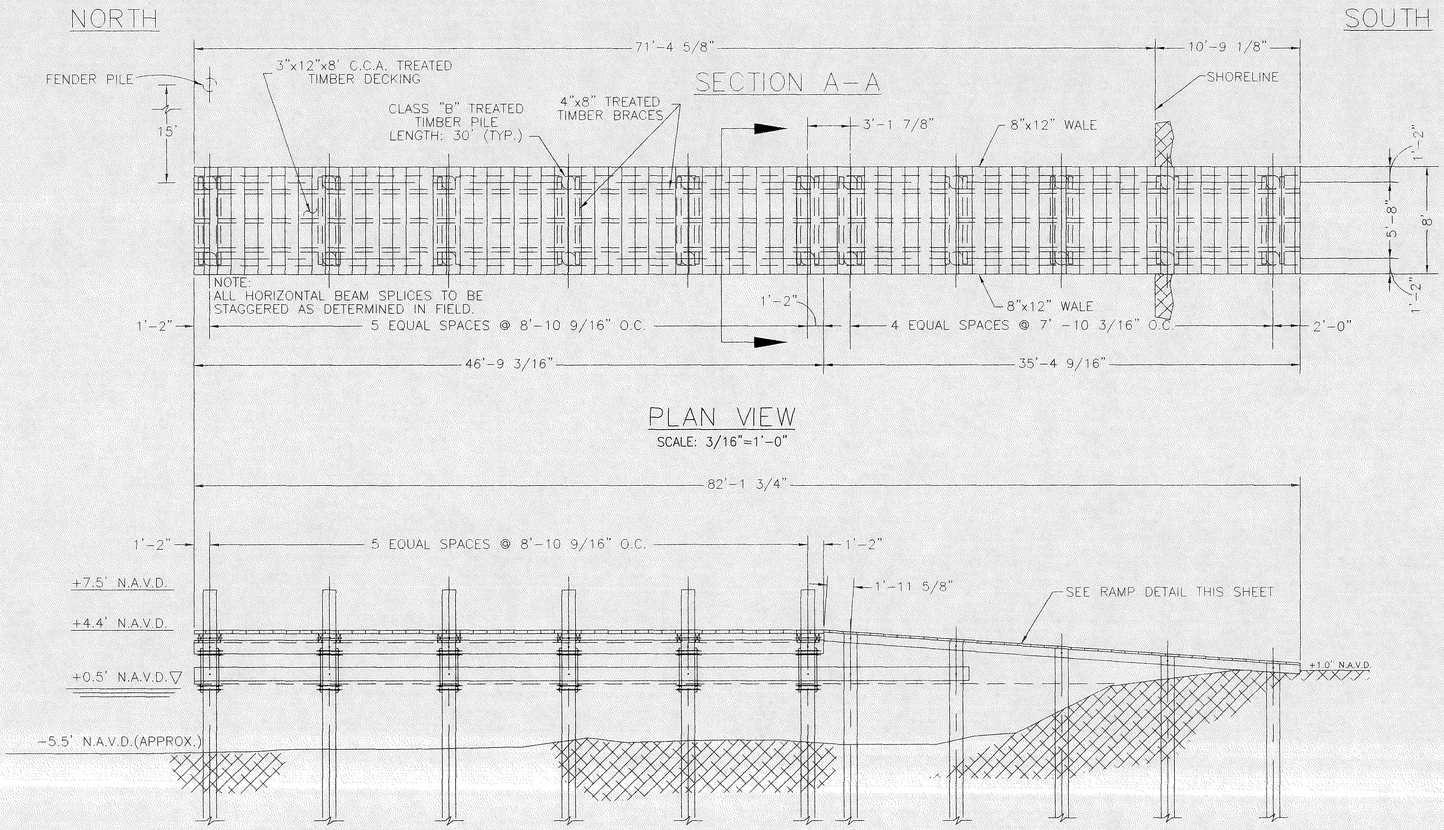


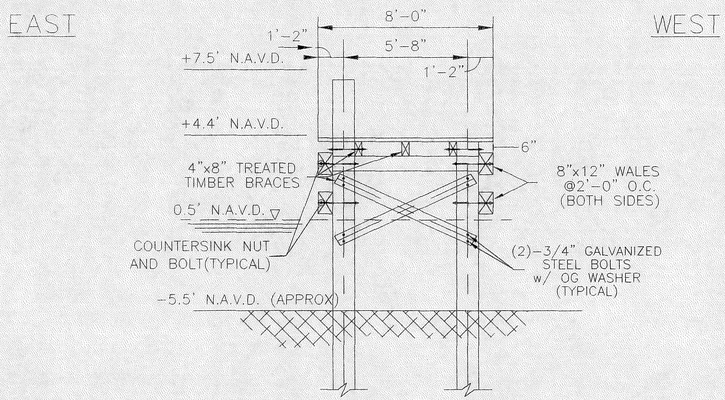


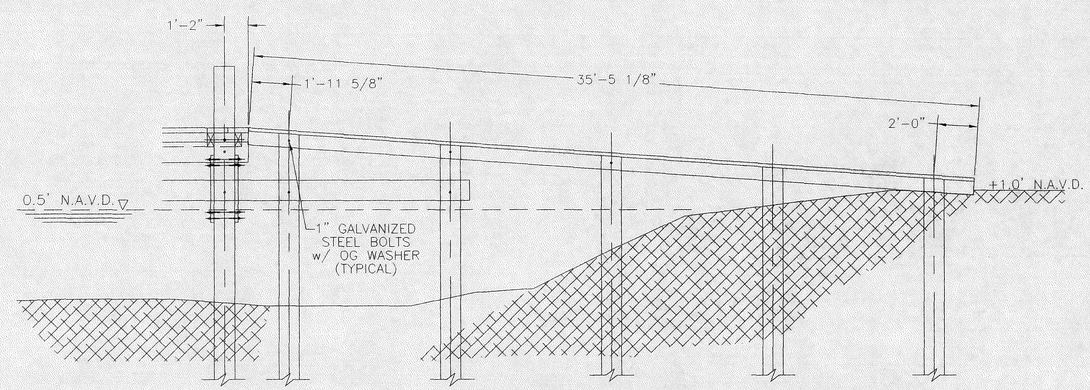


Ref: T. Baker Smith & Son, Inc. Construction Drawings "Isle Dernieres Restoration Projects, East Island (Phase0) and Trinity Island (Phase1), Terrebonne Parish, LA," Dated 9/5/97, Sheet 23. (Prepared by CEEC, Inc.)

| DATE | REVISIONS | APPROVED |
|---|---|---|
| | | |
| | | |
| | | |
| | | |

STATE OF LOUISIANA
D. BRIAN KENDRICK
REG. No. 24672
PROFESSIONAL ENGINEER IN CIVIL ENGINEERING
3/16/98

DRAWN BY: HJT/JDF
APPROVED BY: DBK/ALL
DATE: 10/7/97
SCALE: 3/16"=1'

STATE OF LOUISIANA
DEPARTMENT OF NATURAL RESOURCES
COASTAL RESTORATION DIVISION
NICHOLLS STATE UNIVERSITY
P.O. BOX 2079
THIBODAUX, LOUISIANA 70310

WHISKEY ISLAND RESTORATION
PROJECT - PHASE 3b
TE-27 / PTE15bii

WHARF DETAILS

| FEDERAL PROJECT NO. | STATE PROJECT NOS. | PARISH | SHEET NO. |
|---|---|---|---|
| PTE15bii | TE-27 | TERREBONNE | 13 |

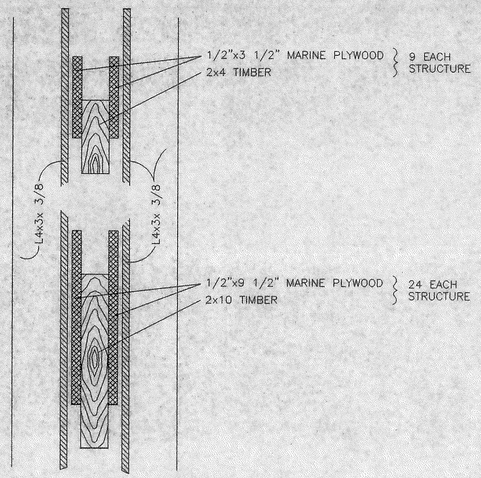


WEIR BOARD DETAIL
SCALE 1"=3"

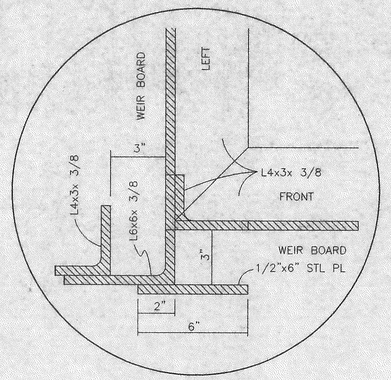


DETAIL "A"
SCALE 1"=3"

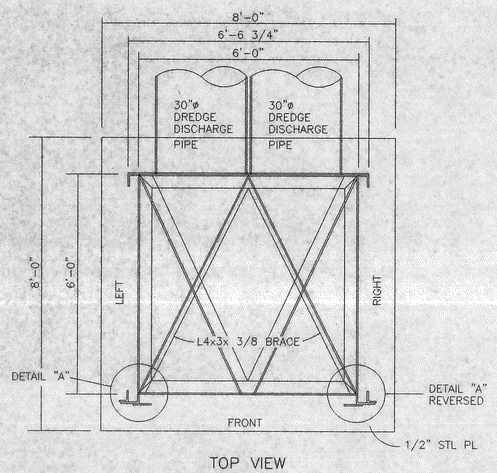


TOP VIEW
SCALE 1/2"=1'-0"

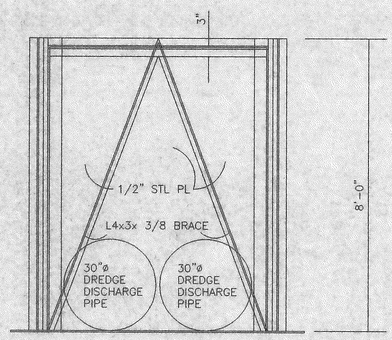


FRONT VIEW
SCALE 1/2"=1'-0"

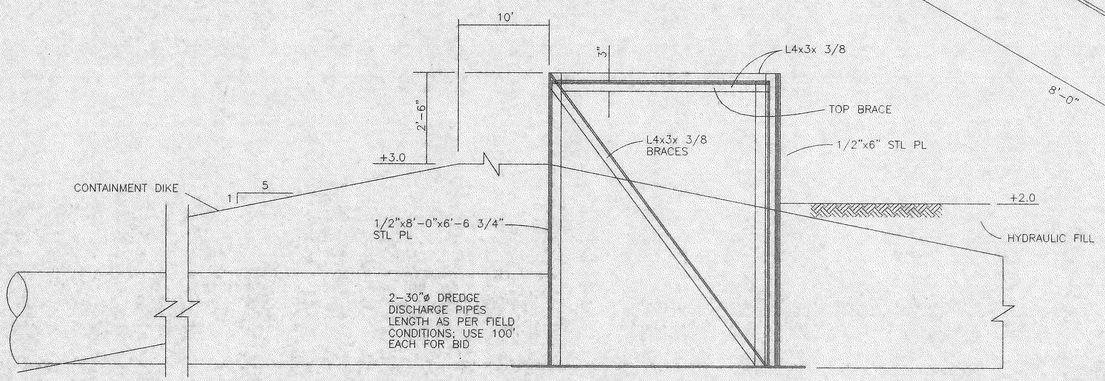


LEFT VIEW
SCALE 1/2"= 1'-0"

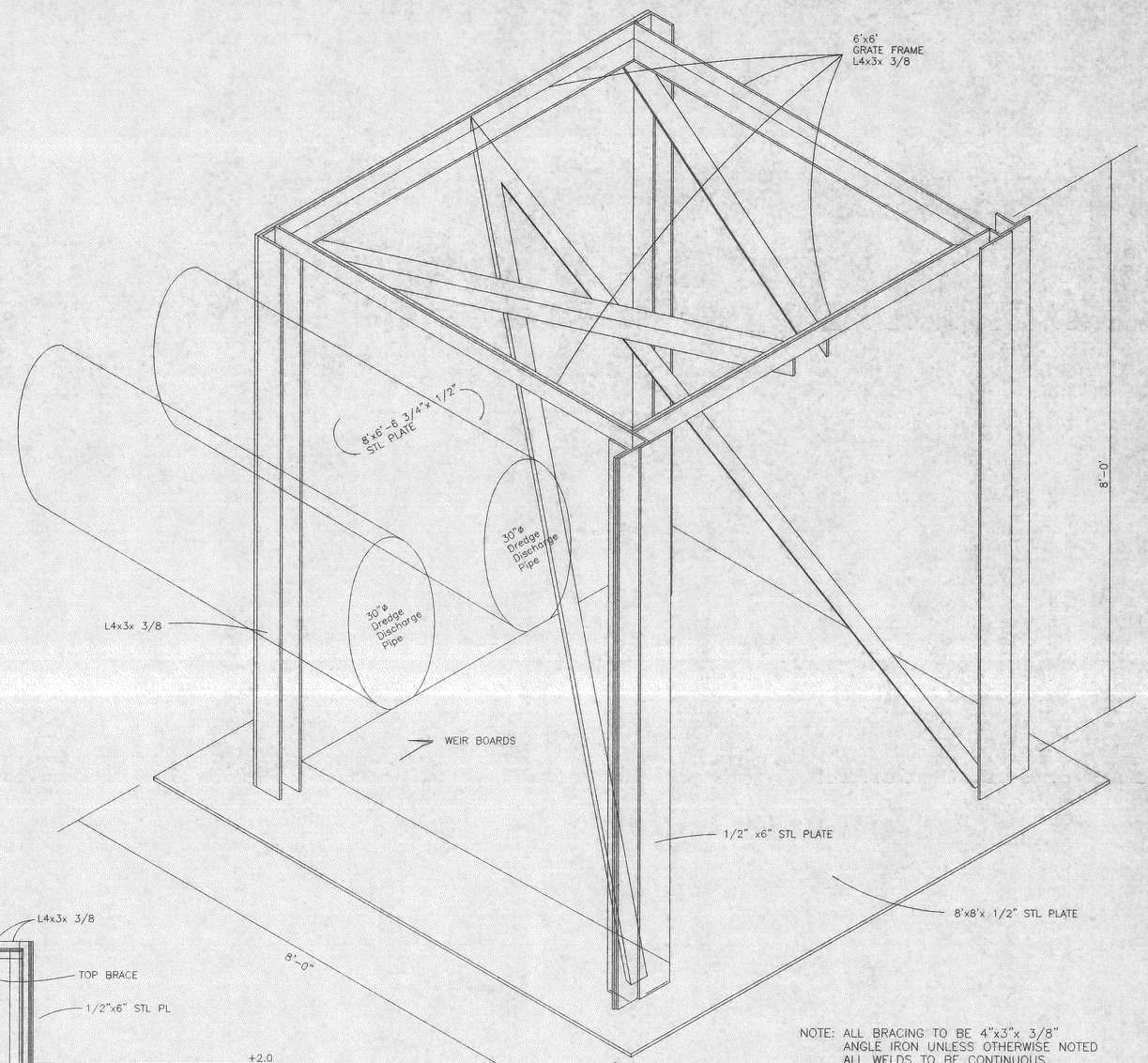


FRAME DETAIL
ISOMETRIC VIEW
SCALE 1/2"=1'-0"

NOTE: ALL BRACING TO BE 4"x3"x 3/8" ANGLE IRON UNLESS OTHERWISE NOTED
ALL WELDS TO BE CONTINUOUS
CONTRACTOR TO SUPPLY 6'x6'x3" 1 3/4" SERRATED GRATE

[redacted]

Ref: T. Baker Smith & Son, Inc. Construction Drawings "Isle Dernieres Restoration Projects, East Island (Phase 0) and Trinity Island (Phase 1), Terrebonne Parish, LA," Dated August, 97, Sheet 24.

| DATE | REVISIONS | APPROVED |
|---|---|---|
| | | |
| | | |
| | | |
| | | |

STATE OF LOUISIANA
D. BRIAN KENDRICK
REG. No. 24672
PROFESSIONAL ENGINEER IN CIVIL ENGINEERING
11/6/97

| | |
|---|---|
| DRAWN BY: | HJT/JDF |
| APPROVED BY: | DBK/ALL |
| DATE : | 10/7/97 |
| SCALE : | 1/2" = 1' |

STATE OF LOUISIANA
DEPARTMENT OF NATURAL RESOURCES
COASTAL RESTORATION DIVISION
NICHOLLS STATE UNIVERSITY
P.O. BOX 2079
THIBODAUX, LOUISIANA 70310

WHISKEY ISLAND RESTORATION
PROJECT – PHASE 3b
TE-27 / PTE15bii

OVERFLOW WEIR BOX
AND DETAILS

| FEDERAL PROJECT NO. | STATE PROJECT NOS. | PARISH | SHEET NO. |
|---|---|---|---|
| PTE15bii | TE-27 | TERREBONNE | 14 |

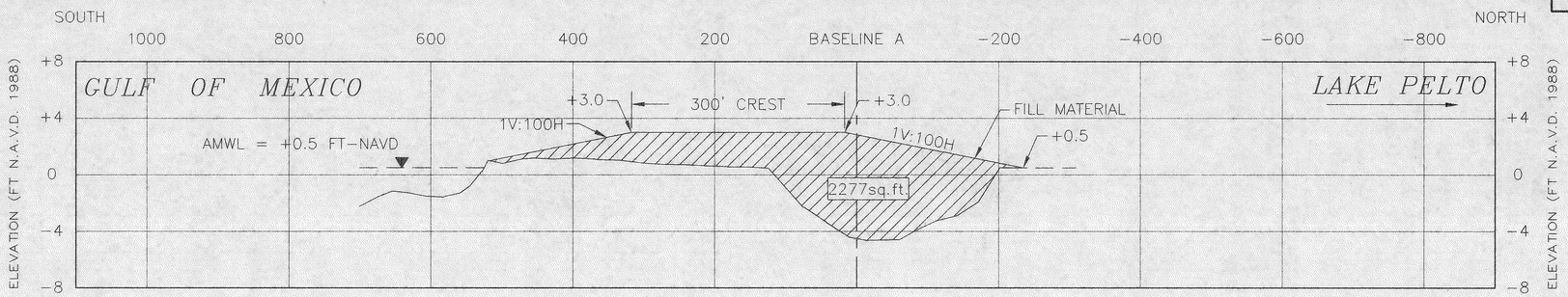


STA = 15+00

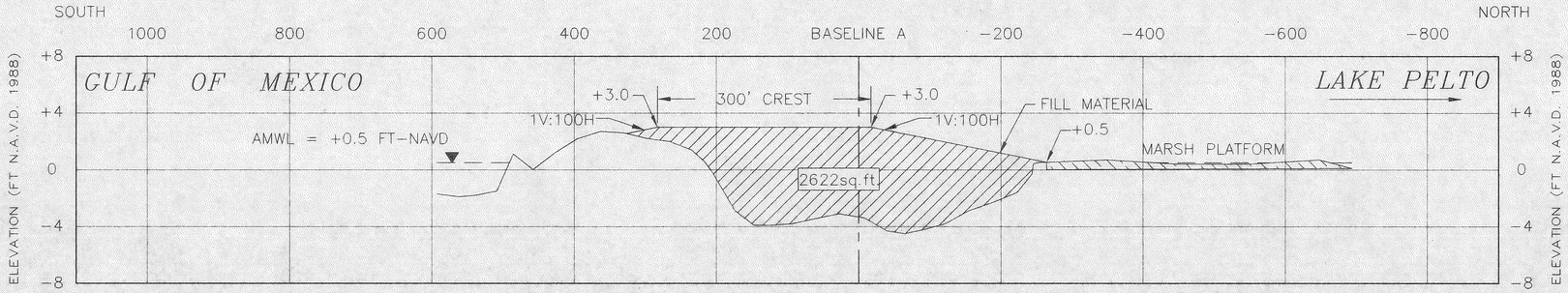


STA = 12+50

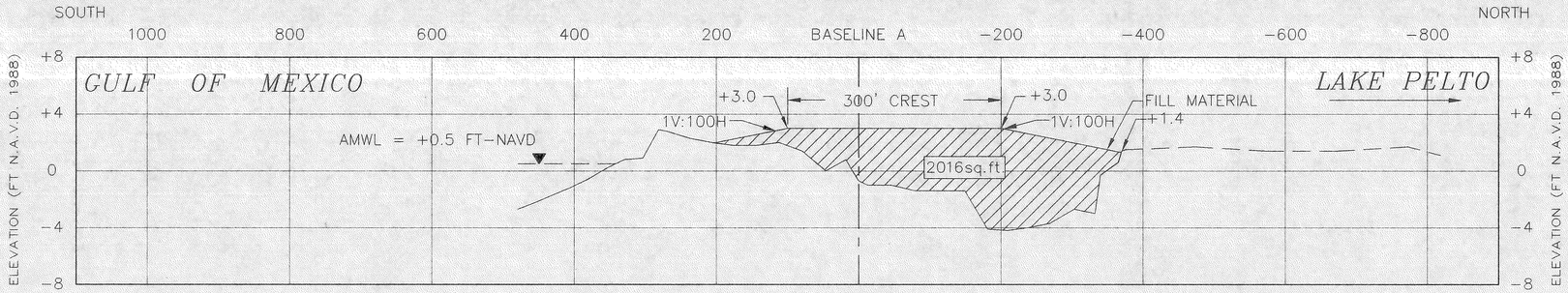


STA = 10+00

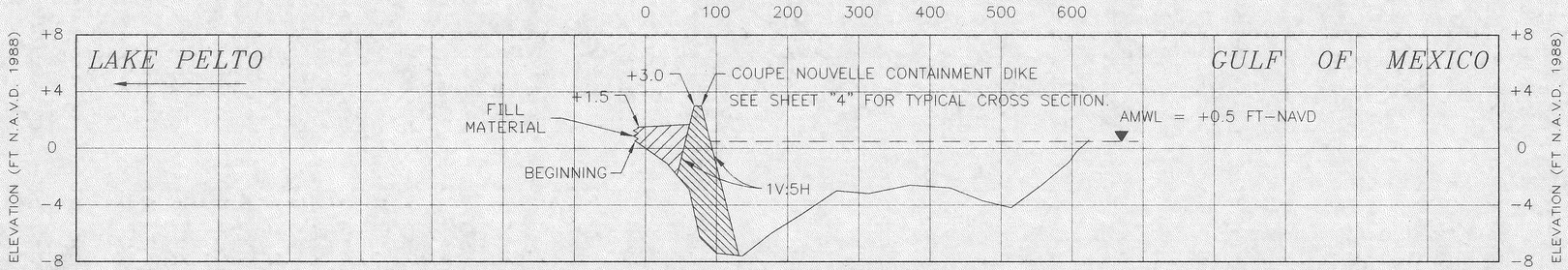


COUPE NOUVELLE ENTRANCE

[redacted]

Ref: Picciola and Associates Survey Drawings "Hydrographic and Topographic Survey, Whiskey Island Restoration Project Part1 (TE-27/PTE15bii), Terrebonne Parish, LA" Dated 8/14/97, Sheets 1-13.

| DATE | REVISIONS | APPROVED |
|---|---|---|
| | | |
| | | |
| | | |
| | | |

STATE OF LOUISIANA
D. BRIAN KENDRICK
REG. No. 24672
REGISTERED
PROFESSIONAL ENGINEER
IN
CIVIL ENGINEERING

| | |
|---|---|
| DRAWN BY: | HJT/JDF |
| APPROVED BY: | DBK/ALL |
| DATE : | 10/7/97 |
| SCALE : | HORZ. 1" = 100' VERT. 1" = 5' |

STATE OF LOUISIANA
DEPARTMENT OF NATURAL RESOURCES
COASTAL RESTORATION DIVISION
NICHOLLS STATE UNIVERSITY
P.O. BOX 2079
THIBODAUX, LOUISIANA 70310

WHISKEY ISLAND RESTORATION
PROJECT - PHASE 3b
TE-27 / PTE15bii

BASELINE A-COUPE NOUVELLE' CROSS-SECTIONS

| FEDERAL PROJECT NO. | STATE PROJECT NOS. | PARISH | SHEET NO. |
|---|---|---|---|
| PTE15bii | TE-27 | TERREBONNE | 15 |

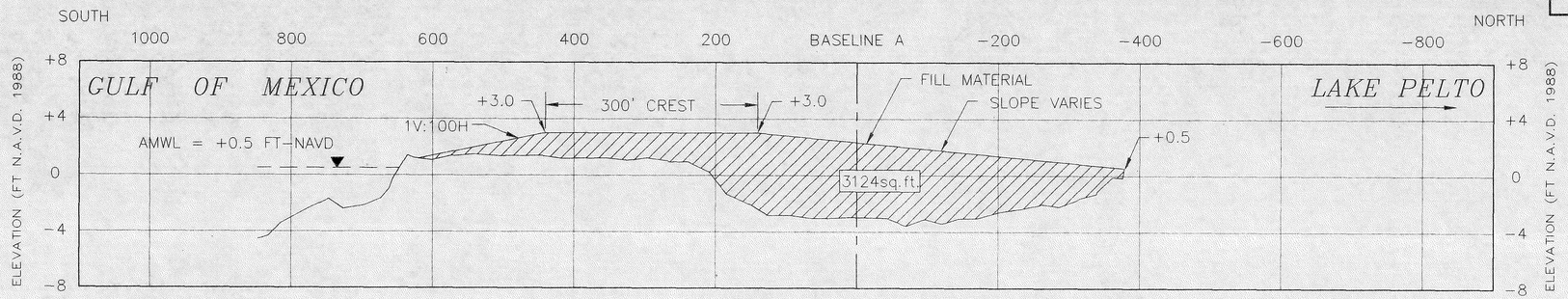


STA = 25+00

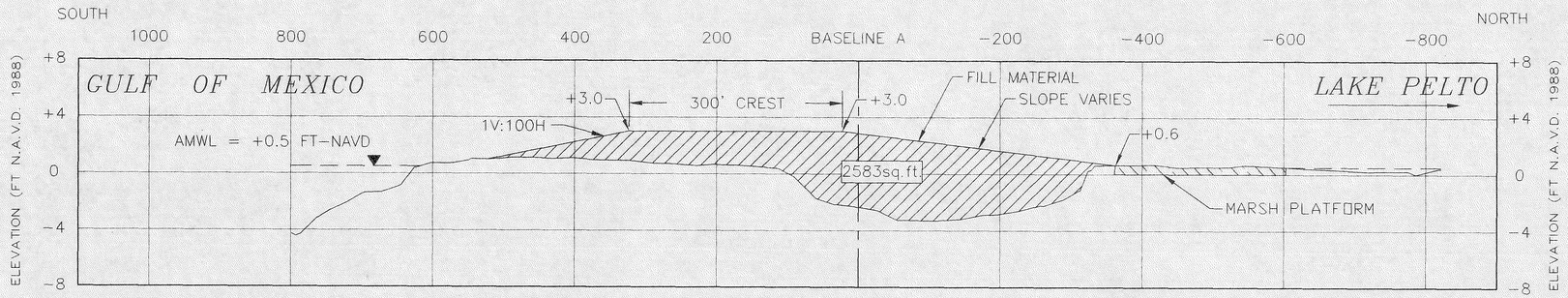


STA = 22+50

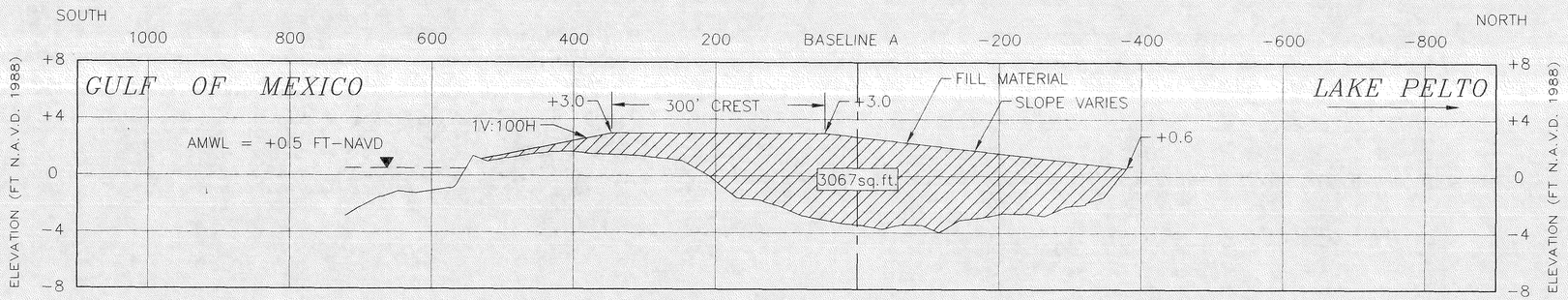


STA = 20+00

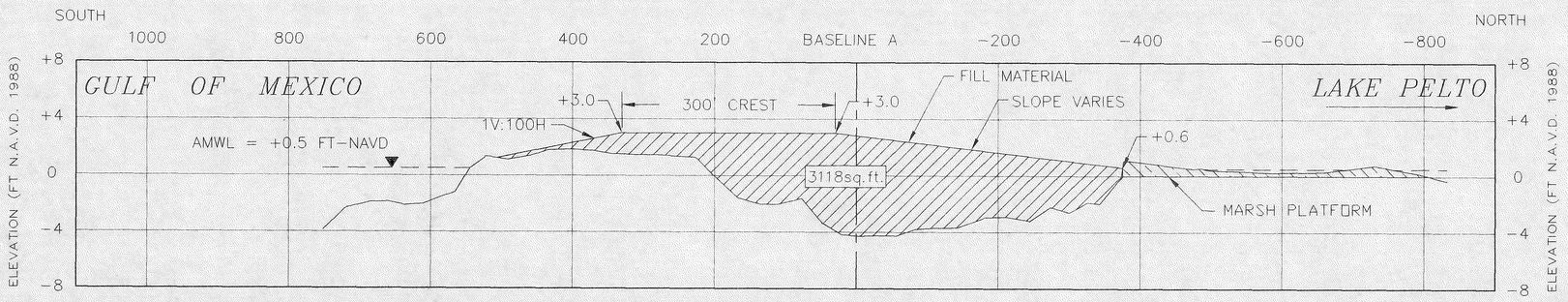


STA = 17+50

[redacted]

Ref: Picciola and Associates Survey Drawings "Hydrographic and Topographic Survey, Whiskey Island Restoration Project Part1 (TE-27/PTE15bii), Terrebonne Parish, LA" Dated 8/14/97, Sheets 1-13.

| DATE | REVISIONS | APPROVED |
|---|---|---|
| | | |
| | | |
| | | |
| | | |

STATE OF LOUISIANA
D. BRIAN KENDRICK
REG. No. 24672
REGISTERED
PROFESSIONAL ENGINEER
IN
CIVIL ENGINEERING
11/6/97

| | |
|---|---|
| DRAWN BY: | HJT/JDF |
| APPROVED BY: | DBK/ALL |
| DATE: | 10/7/97 |
| SCALE: | HORZ. 1" = 100' VERT. 1" = 5' |

STATE OF LOUISIANA
DEPARTMENT OF NATURAL RESOURCES
COASTAL RESTORATION DIVISION
NICHOLLS STATE UNIVERSITY
P.O. BOX 2079
THIBODAUX, LOUISIANA 70310

WHISKEY ISLAND RESTORATION
PROJECT - PHASE 3b
TE-27 / PTE15bii

BASELINE A-COUPE NOUVELLE'
CROSS-SECTIONS

| FEDERAL PROJECT NO. | STATE PROJECT NOS. | PARISH | SHEET NO. |
|---|---|---|---|
| PTE15bii | TE-27 | TERREBONNE | 16 |

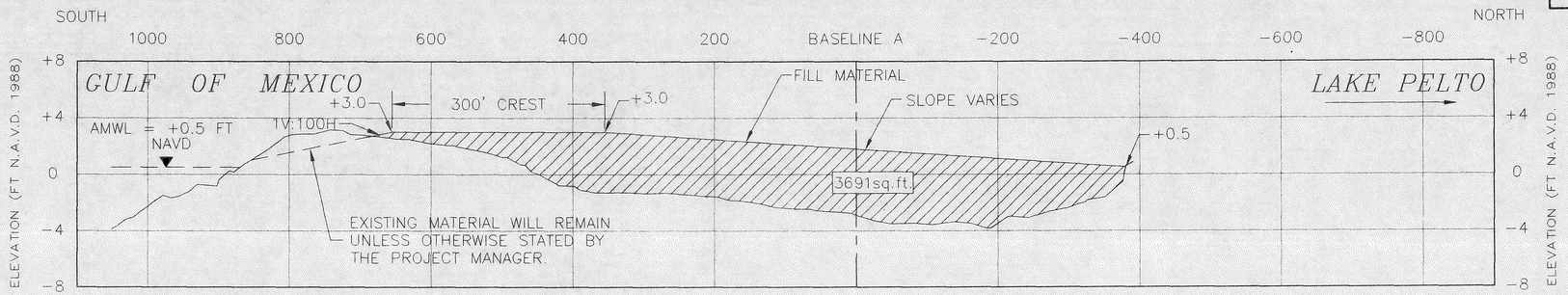


STA = 35+00

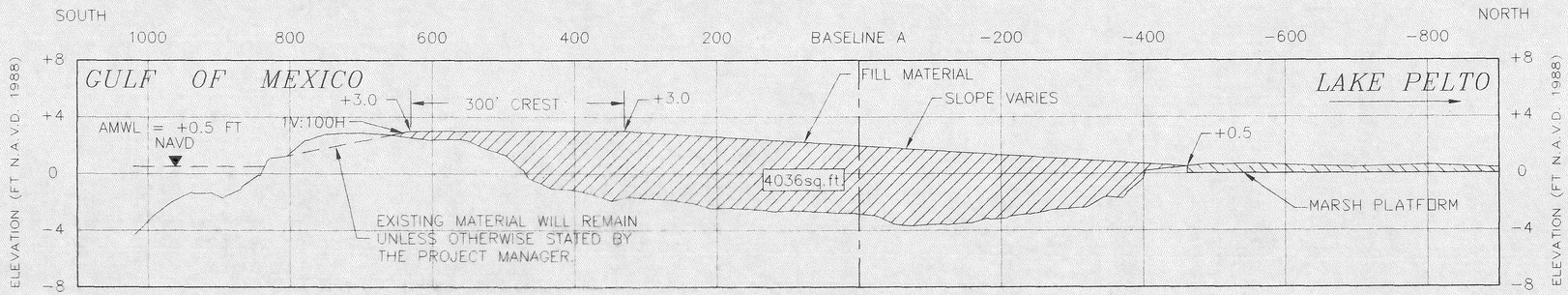


STA = 32+50

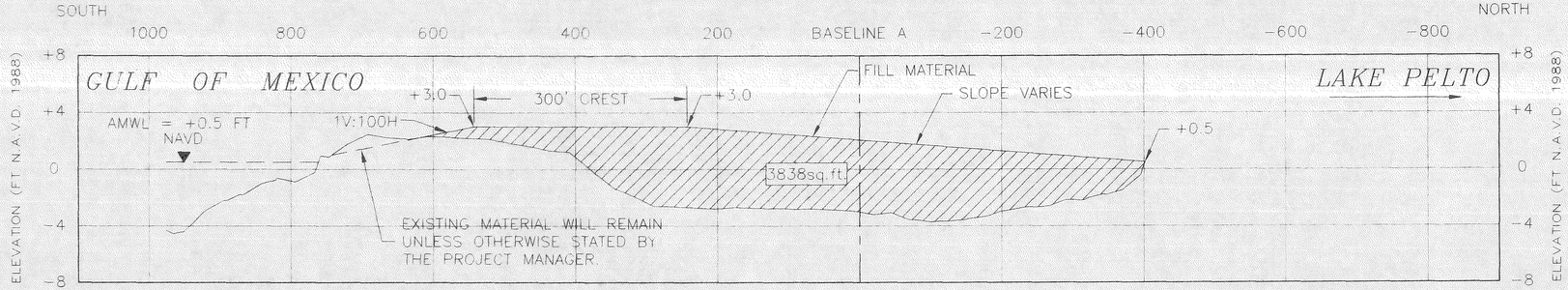


STA = 30+00

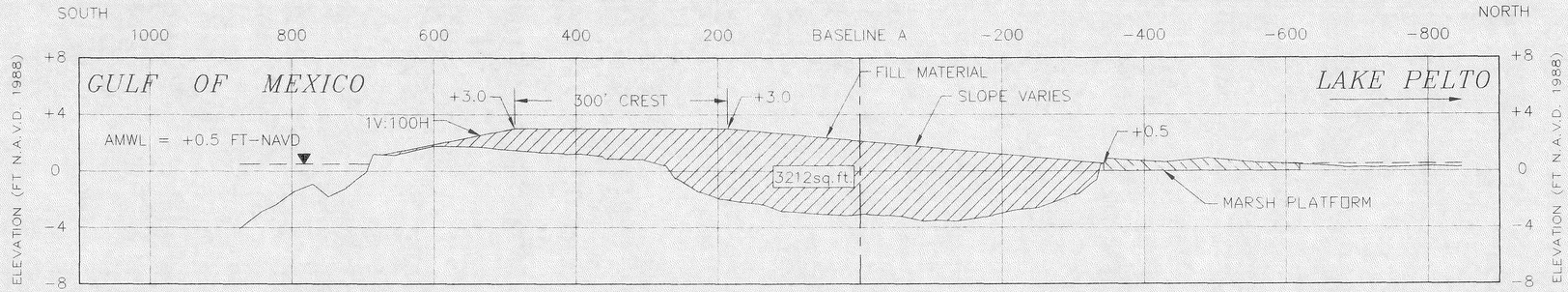


STA = 27+50

[redacted]

Ref: Picciola and Associates Survey Drawings "Hydrographic and Topographic Survey, Whiskey Island Restoration Project Part1 (TE-27/PTE15bii), Terrebonne Parish, LA" Dated 8/14/97, Sheets 1-13.

| DATE | REVISIONS | APPROVED |
|---|---|---|
| | | |
| | | |
| | | |
| | | |

STATE OF LOUISIANA
D. BRIAN KENDRICK
REG. No. 24612
PROFESSIONAL ENGINEER IN CIVIL ENGINEERING

| | |
|---|---|
| DRAWN BY: | HJT/JDF |
| APPROVED BY: | DBK/ALL |
| DATE: | 10/7/97 |
| SCALE: | HORZ. 1" = 100' VERT. 1" = 5' |

STATE OF LOUISIANA
DEPARTMENT OF NATURAL RESOURCES
COASTAL RESTORATION DIVISION
NICHOLLS STATE UNIVERSITY
P.O. BOX 2079
THIBODAUX, LOUISIANA 70310

WHISKEY ISLAND RESTORATION
PROJECT - PHASE 3b
TE-27 / PTE15bii

BASELINE A-COUPE NOUVELLE'
CROSS-SECTIONS

| FEDERAL PROJECT NO. | STATE PROJECT NOS. | PARISH | SHEET NO. |
|---|---|---|---|
| PTE15bii | TE-27 | TERREBONNE | 17 |

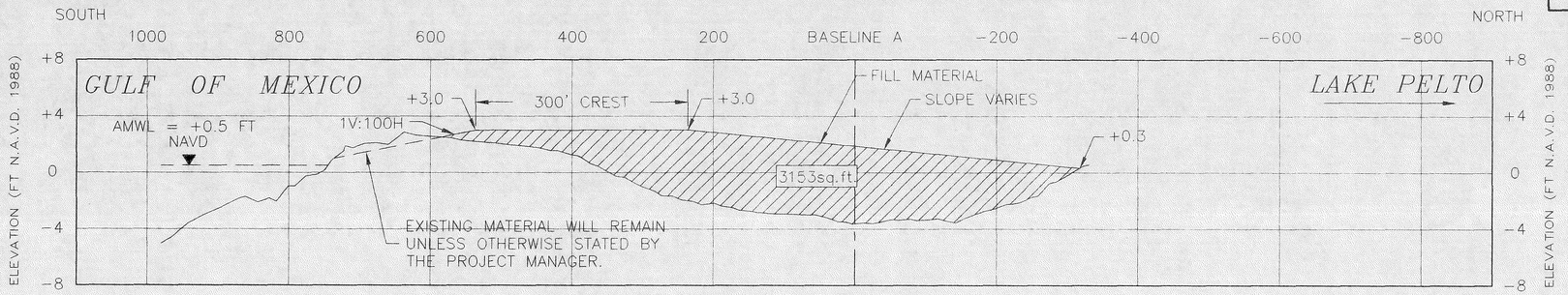


STA = 45+00

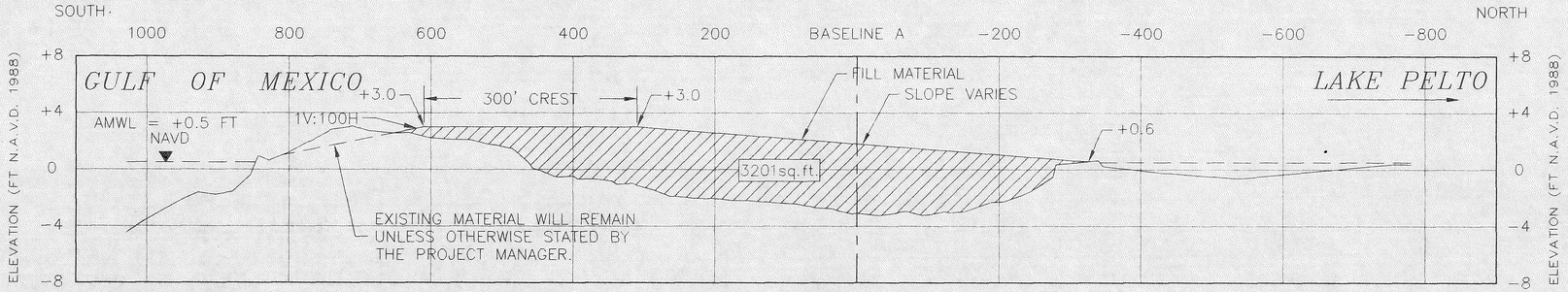


STA = 42+50

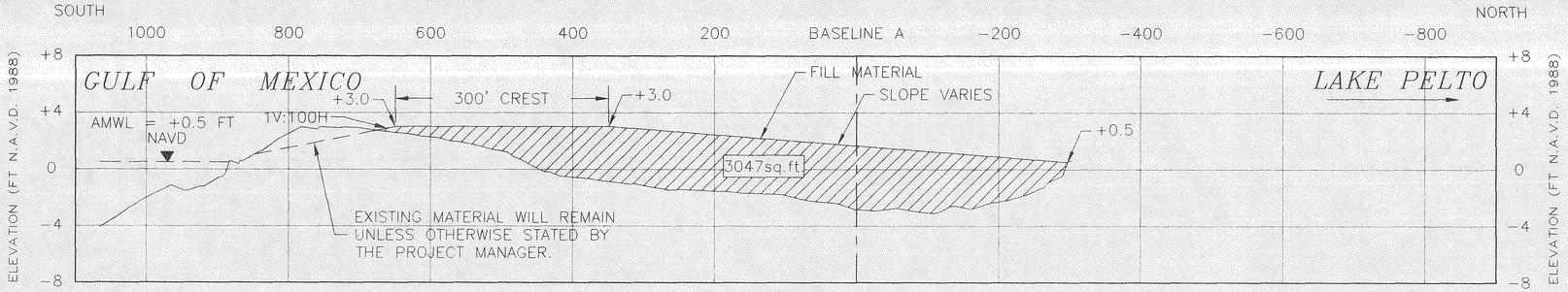


STA = 40+00

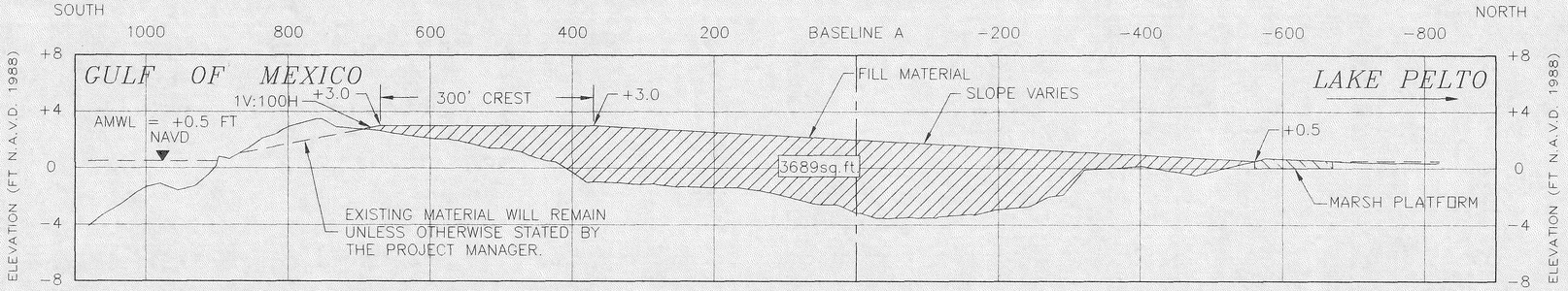


STA = 37+50

[redacted]

Ref: Picciola and Associates Survey Drawings "Hydrographic and Topographic Survey, Whiskey Island Restoration Project Part1 (TE-27/PTE15bii), Terrebonne Parish, LA" Dated 8/14/97, Sheets 1-13.

| DATE | REVISIONS | APPROVED |
|---|---|---|
| | | |
| | | |
| | | |
| | | |

STATE OF LOUISIANA
D. BRIAN KENDRICK
REG. No. 24672
REGISTERED
PROFESSIONAL ENGINEER
IN
CIVIL ENGINEERING
11/6/98

| | |
|---|---|
| DRAWN BY: | HJT/JDF |
| APPROVED BY: | DBK/ALL |
| DATE | 10/7/97 |
| SCALE | HORZ. 1" = 100'<br>VERT. 1" = 5' |

STATE OF LOUISIANA
DEPARTMENT OF NATURAL RESOURCES
COASTAL RESTORATION DIVISION
NICHOLLS STATE UNIVERSITY
P.O. BOX 2079
THIBODAUX, LOUISIANA 70310

WHISKEY ISLAND RESTORATION
PROJECT - PHASE 3b
TE-27 / PTE15bii

BASELINE A-COUPE NOUVELLE'
CROSS-SECTIONS

| FEDERAL PROJECT NO. | STATE PROJECT NOS. | PARISH | SHEET NO. |
|---|---|---|---|
| PTE15bii | TE-27 | TERREBONNE | 18 |

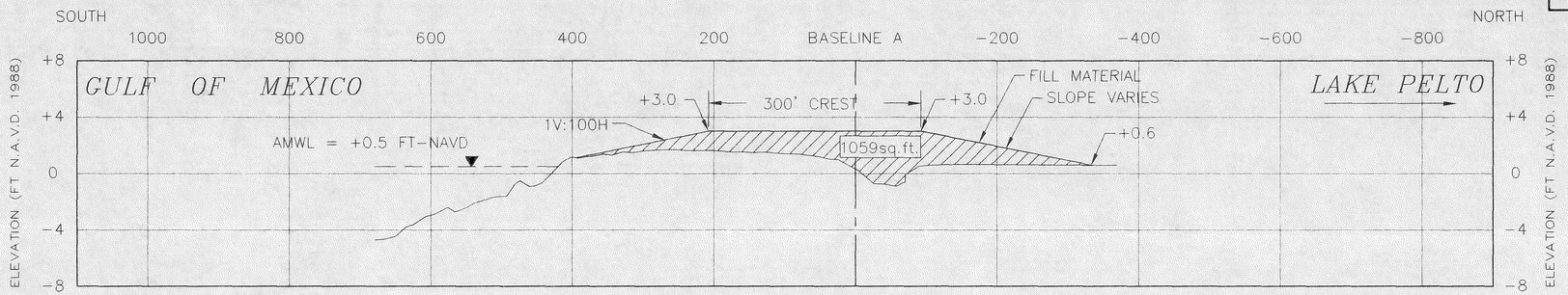


STA = 55+00

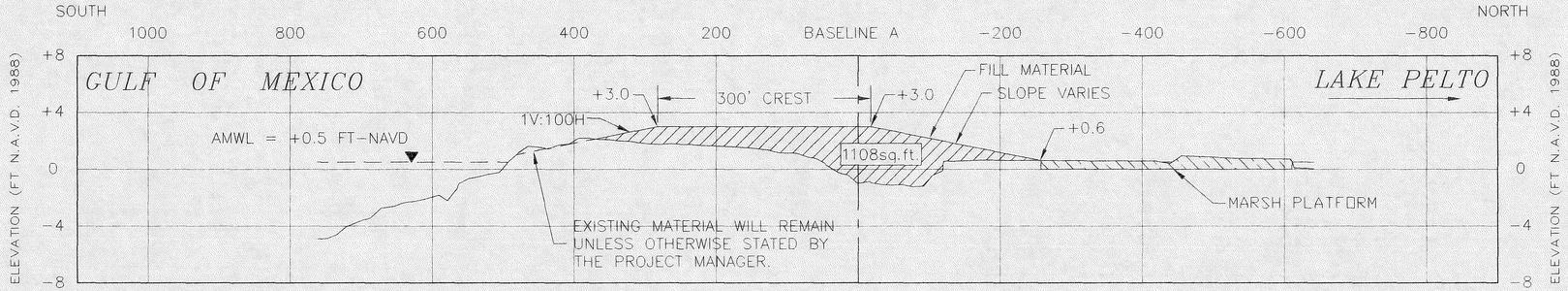


STA = 52+50

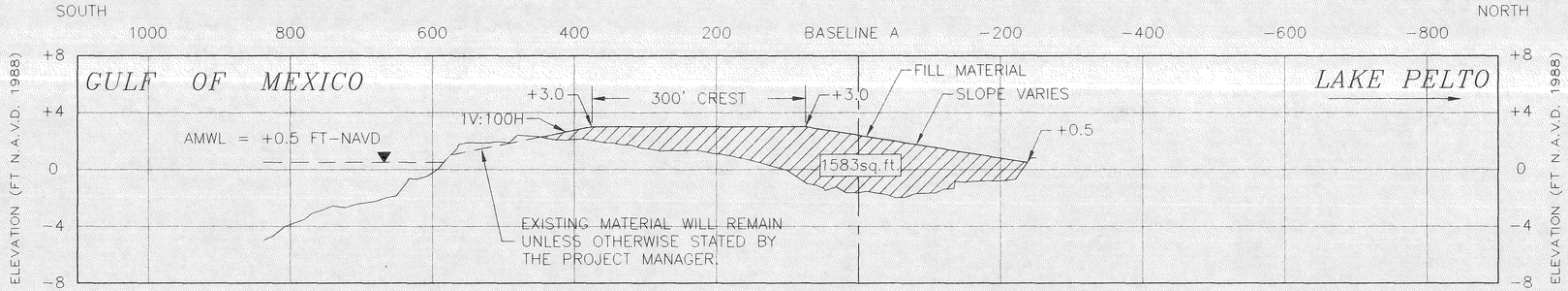


STA = 50+00

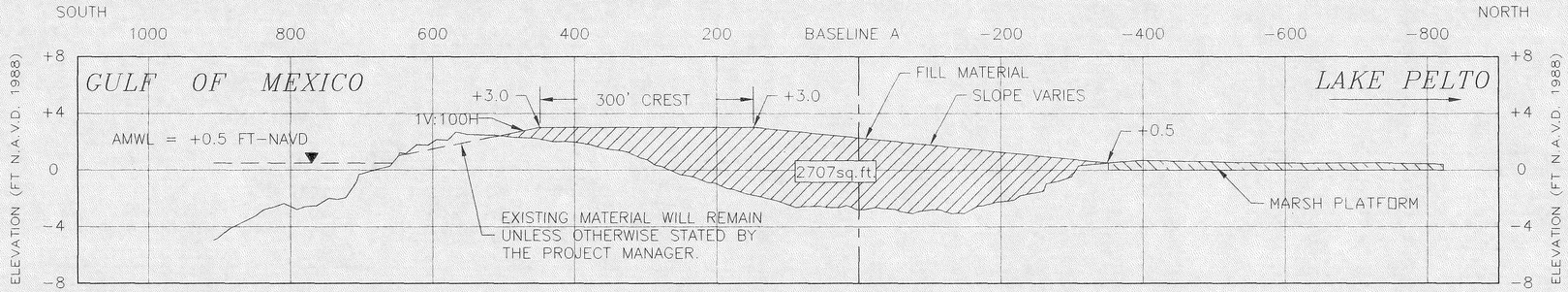


STA = 47+50

[redacted]

Ref: Picciola and Associates Survey Drawings "Hydrographic and Topographic Survey, Whiskey Island Restoration Project Part1 (TE-27/PTE15bii), Terrebonne Parish, LA" Dated 8/14/97, Sheets 1-13.

| DATE | REVISIONS | APPROVED |
|---|---|---|
| | | |
| | | |
| | | |
| | | |

STATE OF LOUISIANA
D. BRIAN KENDRICK
REG. No. 24072
REGISTERED
PROFESSIONAL ENGINEER
IN
CIVIL ENGINEERING
7/16/98

| | |
|---|---|
| DRAWN BY: | HJT/JDF |
| APPROVED BY: | DBK/ALL |
| DATE: | 10/7/97 |
| SCALE: | HORZ. 1" = 100'<br>VERT. 1" = 5' |

STATE OF LOUISIANA
DEPARTMENT OF NATURAL RESOURCES
COASTAL RESTORATION DIVISION
NICHOLLS STATE UNIVERSITY
P.O. BOX 2079
THIBODAUX, LOUISIANA 70310

WHISKEY ISLAND RESTORATION
PROJECT - PHASE 3b
TE-27 / PTE15bii

BASELINE A-COUPE NOUVELLE'
CROSS-SECTIONS

| FEDERAL PROJECT NO. | STATE PROJECT NOS. | PARISH | SHEET NO. |
|---|---|---|---|
| PTE15bii | TE-27 | TERREBONNE | 19 |

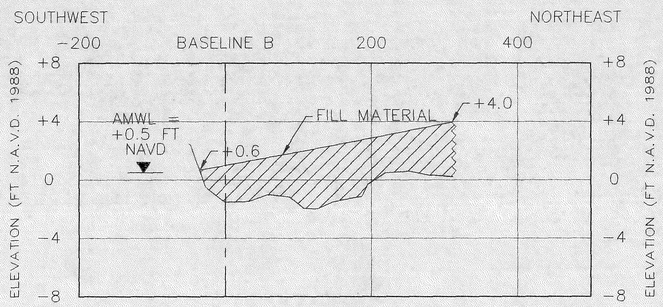


STA = 17+50

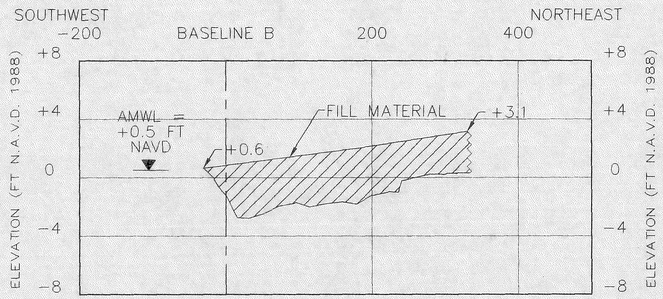


STA = 15+00

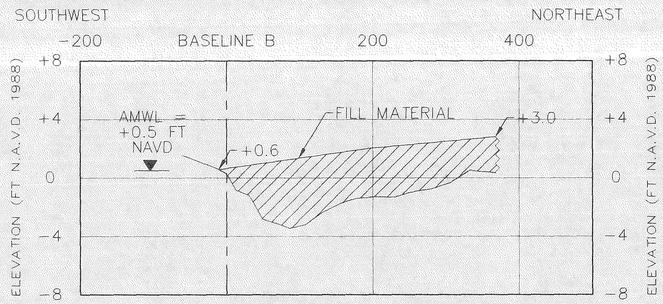


STA = 12+50

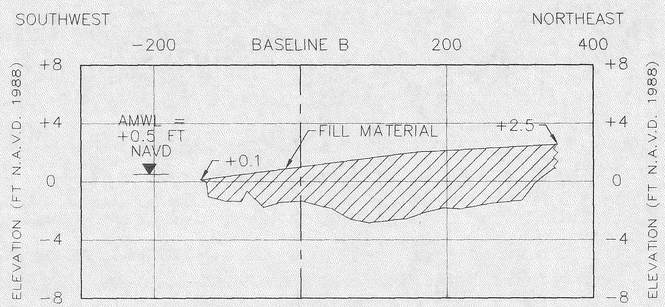


STA = 10+00

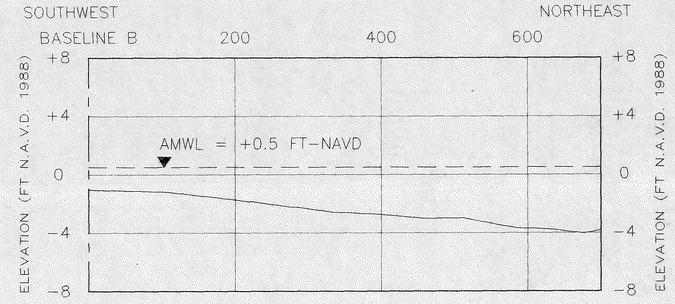


STA = 27+50

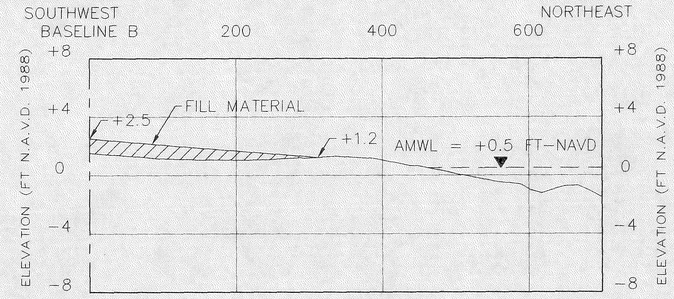


STA = 25+00

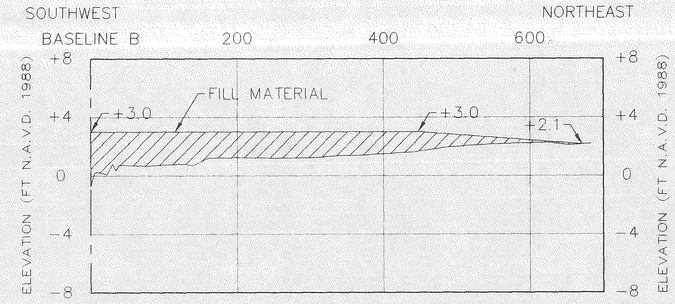


STA = 22+50

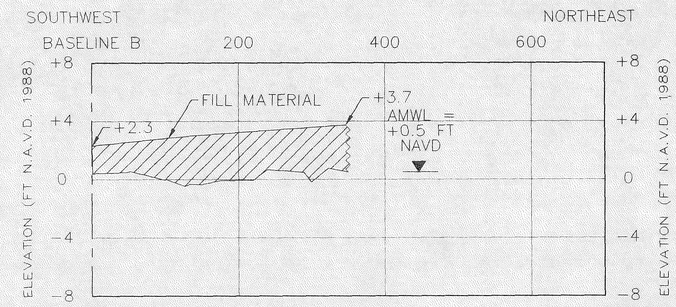


STA = 20+00

[redacted]

Ref: Picciola and Associates Survey Drawings "Hydrographic and Topographic Survey, Whiskey Island Restoration Project Part1 (TE-27/PTE15bii), Terrebonne Parish, LA" Dated 8/14/97, Sheets 1-13.

| DATE | REVISIONS | APPROVED |
|---|---|---|
| | | |
| | | |
| | | |
| | | |

STATE OF LOUISIANA
D. BRIAN KENDRICK
REG. No. 24612
REGISTERED
PROFESSIONAL ENGINEER
IN
CIVIL ENGINEERING
11/6/97

DRAWN BY: HJT/JDF
APPROVED BY: DBK/ALL
DATE: 10/7/97
SCALE: HORZ. 1" = 100' VERT. 1" = 5'

STATE OF LOUISIANA
DEPARTMENT OF NATURAL RESOURCES
COASTAL RESTORATION DIVISION
NICHOLLS STATE UNIVERSITY
P.O. BOX 2079
THIBODAUX, LOUISIANA 70310

WHISKEY ISLAND RESTORATION
PROJECT - PHASE 3b
TE-27 / PTE15bii

BASELINE B
CROSS-SECTIONS

| FEDERAL PROJECT NO. | STATE PROJECT NOS. | PARISH | SHEET NO. |
|---|---|---|---|
| PTE15bii | TE-27 | TERREBONNE | 20 |

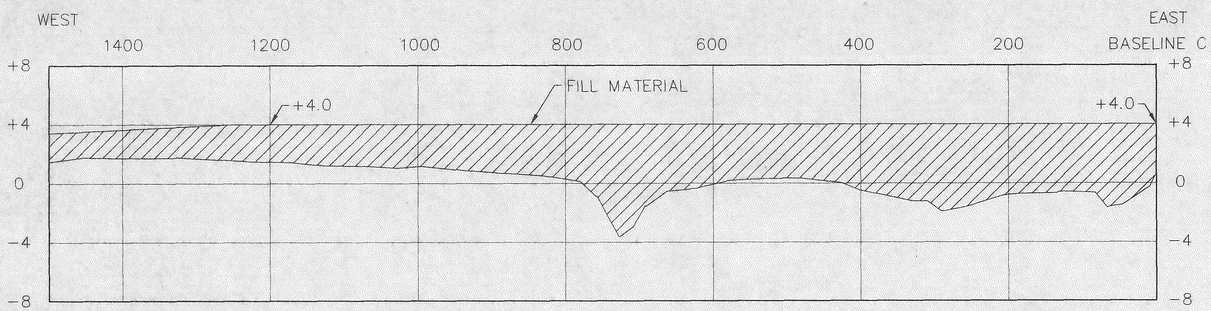


STA = 15+00

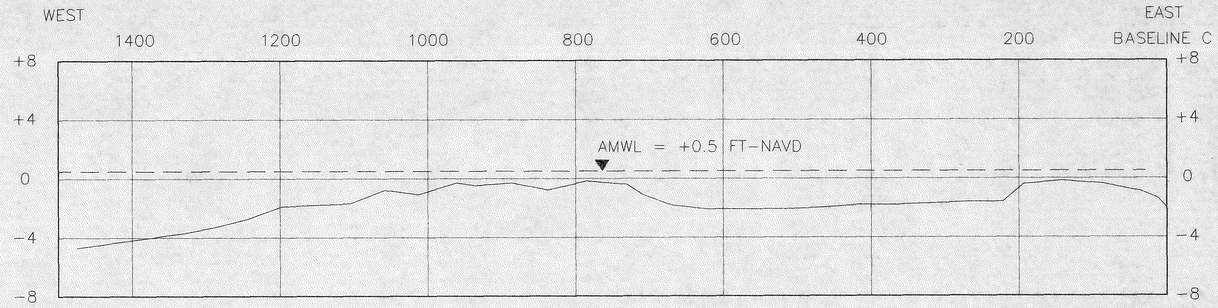


STA = 22+50

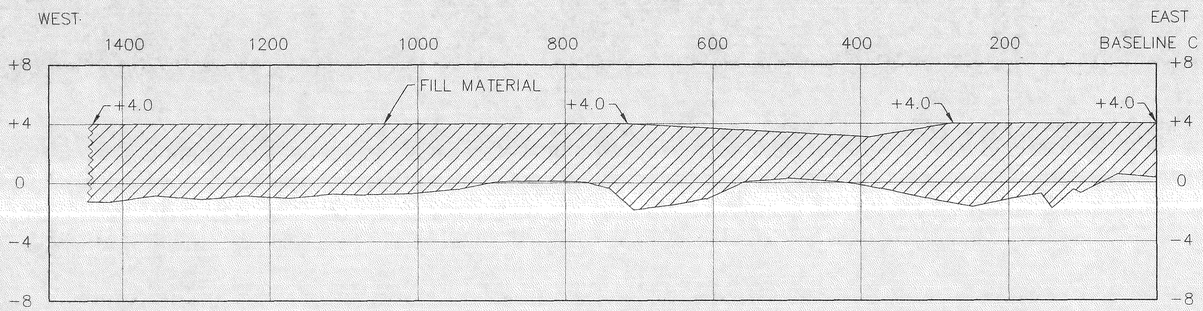


STA = 12+50

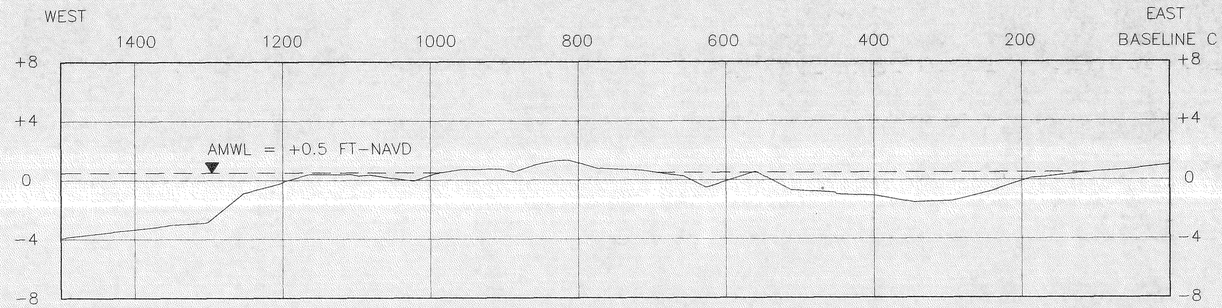


STA = 20+00

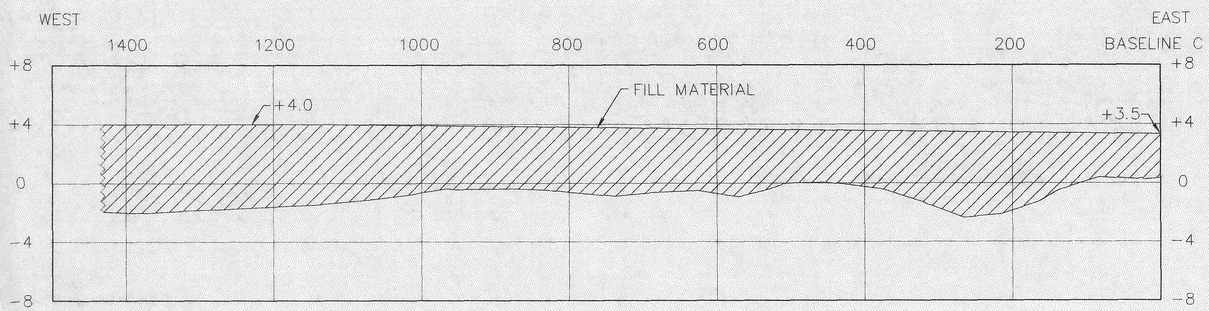


STA = 10+00

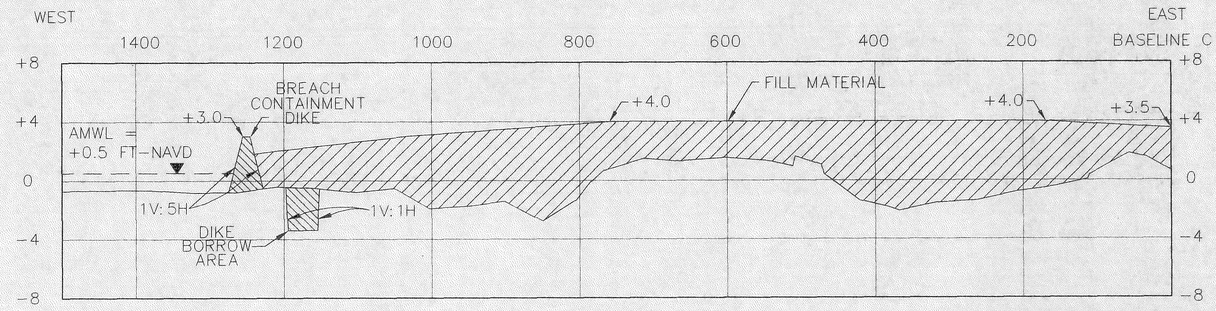


STA = 17+50

[redacted]

Picciola and Associates Survey Drawings "Hydrographic and Topographic Survey, Whiskey Island Restoration Project Part1 (TE-27/PTE15bii), Terrebonne Parish, LA" Dated 8/14/97, Sheets 1-13.

| DATE | REVISIONS | APPROVED |
|---|---|---|
| | | |
| | | |
| | | |
| | | |

STATE OF LOUISIANA
D. BRIAN KENDRICK
REG. No. 24872
REGISTERED
PROFESSIONAL ENGINEER
IN
CIVIL ENGINEERING
10/14/98

DRAWN BY: HJT/JDF
APPROVED BY: DBK/ALL
DATE : 10/7/97
SCALE : HORZ. 1" = 100'
VERT. 1" = 5'

STATE OF LOUISIANA
DEPARTMENT OF NATURAL RESOURCES
COASTAL RESTORATION DIVISION
NICHOLLS STATE UNIVERSITY
P.O. BOX 2079
THIBODAUX, LOUISIANA 70310

WHISKEY ISLAND RESTORATION
PROJECT - PHASE 3b
TE-27 / PTE15bii

BASELINE C
CROSS-SECTIONS

| FEDERAL PROJECT NO. | STATE PROJECT NOS. | PARISH | SHEET NO. |
|---|---|---|---|
| PTE15bii | TE-27 | TERREBONNE | 21 |

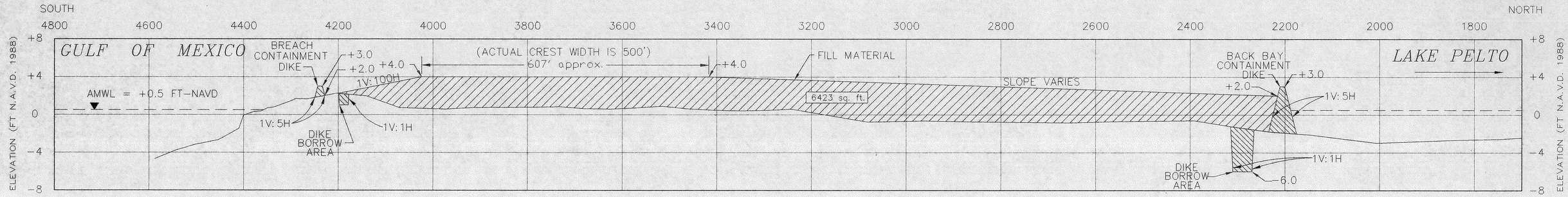


STA = 17+50

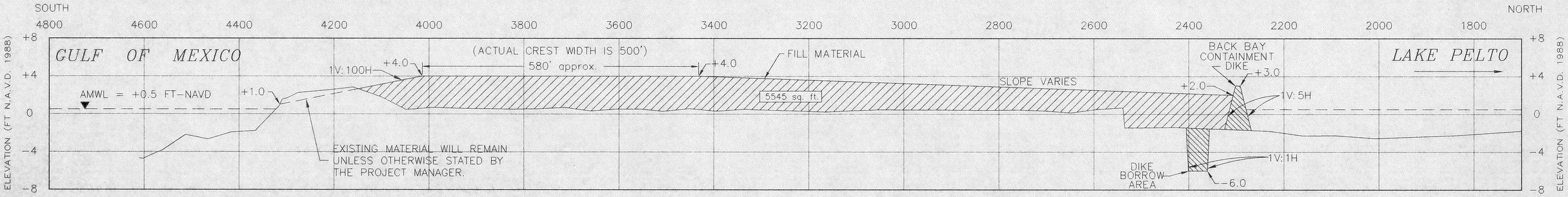


STA = 15+00

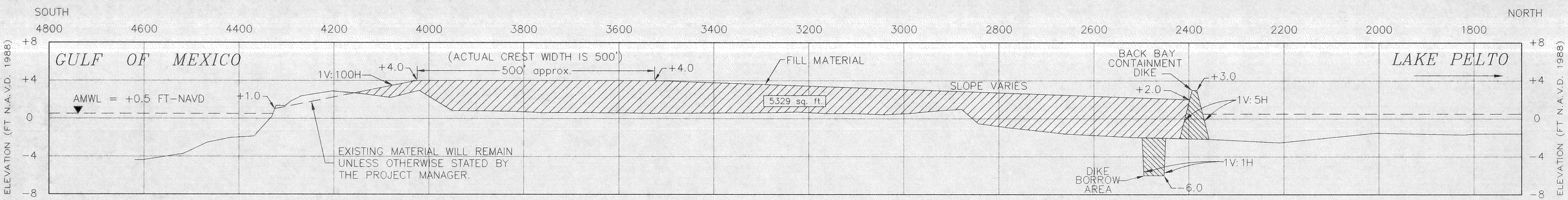


STA = 12+50

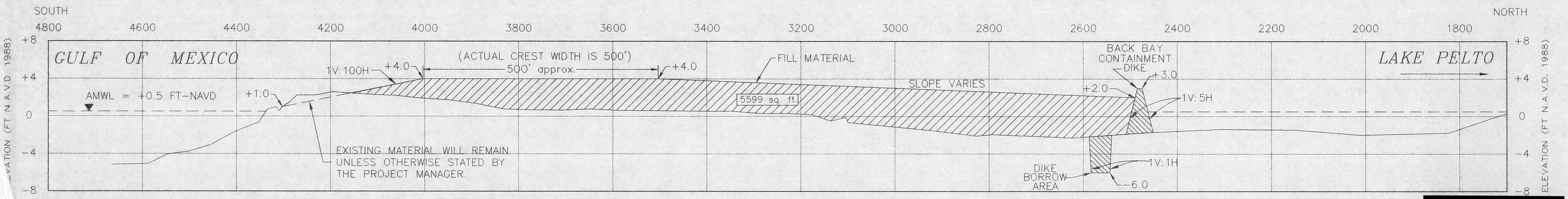


STA = 10+00

[redacted]

ote: Back Bay Cross-sections are not perpendicular to the centerline of the dune. (See Sheet No. 3)

: Picciola and Associates Survey Drawings "Hydrographic and Topographic Survey, Whiskey Island Restoration Project Part1 (TE-27/PTE15bii), Terrebonne Parish, LA" Dated 8/14/97, Sheets 1-13.

| DATE | REVISIONS | APPROVED |
|---|---|---|
| | | |
| | | |
| | | |
| | | |

STATE OF LOUISIANA
D. BRIAN KENDRICK
REG. No. 26672
REGISTERED PROFESSIONAL ENGINEER IN CIVIL ENGINEERING
11/14/97

| | |
|---|---|
| DRAWN BY: | HJT/JDF |
| APPROVED BY: | DBK/ALL |
| DATE : | 10/7/97 |
| SCALE : | HORZ. 1" = 100' VERT. 1" = 5' |

STATE OF LOUISIANA
DEPARTMENT OF NATURAL RESOURCES
COASTAL RESTORATION DIVISION
NICHOLLS STATE UNIVERSITY
P.O. BOX 2079
THIBODAUX, LOUISIANA 70310

WHISKEY ISLAND RESTORATION
PROJECT – PHASE 3b
TE-27 / PTE15bii

BASELINE D-BACK BAY
CROSS-SECTIONS

| FEDERAL PROJECT NO. | STATE PROJECT NOS. | PARISH | SHEET NO. |
|---|---|---|---|
| PTE15bii | TE-27 | TERREBONNE | 22 |

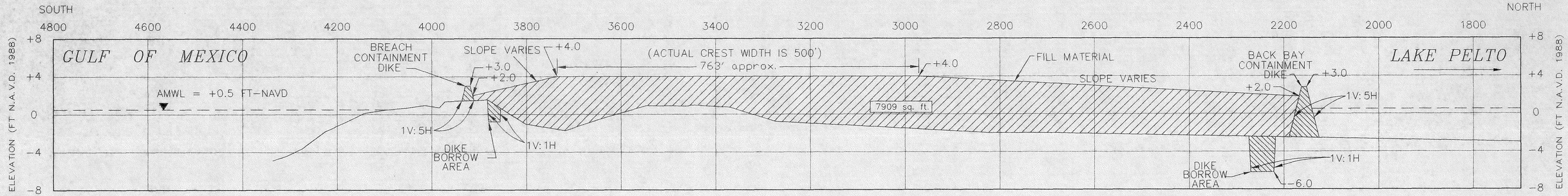


STA = 27+50

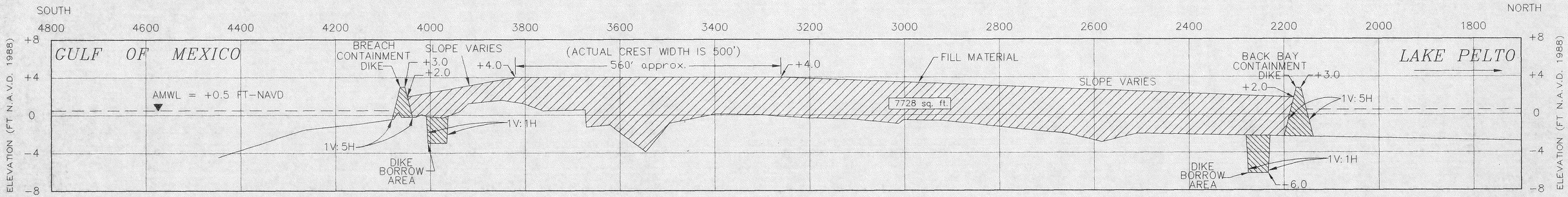


STA = 25+00

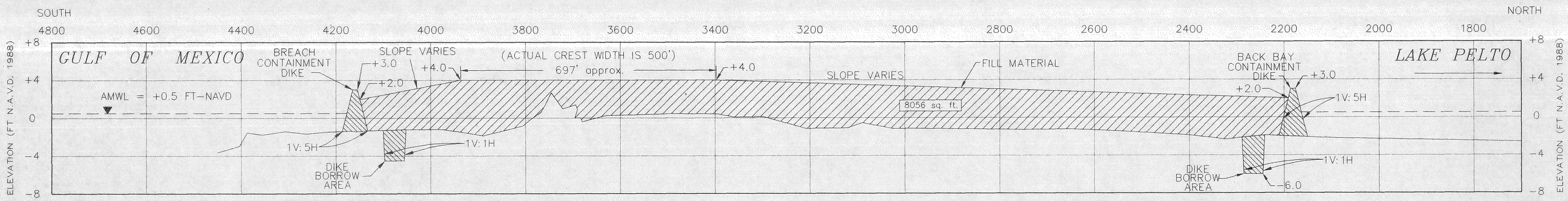


STA = 22+50

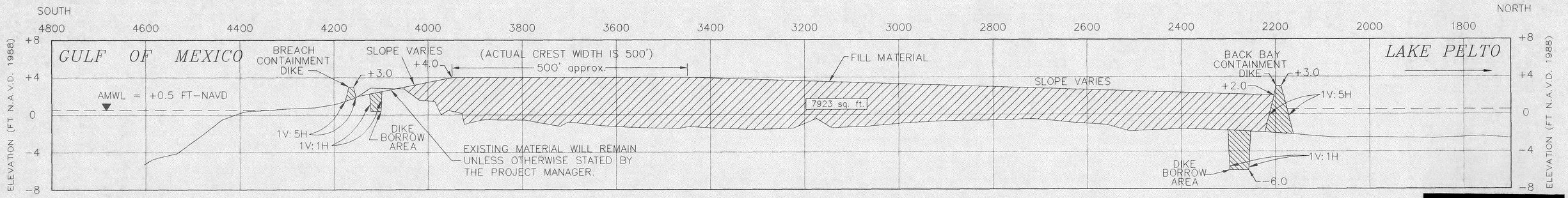


STA = 20+00

[redacted]

Note: Back Bay Cross-sections are not perpendicular to the centerline of the dune. (See Sheet No. 3)

Ref: Picciola and Associates Survey Drawings "Hydrographic and Topographic Survey, Whiskey Island Restoration Project Part1 (TE-27/PTE15bii), Terrebonne Parish, LA" Dated 8/14/97, Sheets 1-13.

| DATE | REVISIONS | APPROVED |
|---|---|---|
| | | |
| | | |
| | | |

STATE OF LOUISIANA
D. BRIAN KENDRICK
REG. No. 24072
REGISTERED
PROFESSIONAL ENGINEER
IN
CIVIL ENGINEERING
11/4/98

| | |
|---|---|
| DRAWN BY: | HJT/JDF |
| APPROVED BY: | DBK/ALL |
| DATE : | 10/7/97 |
| SCALE : | HORZ. 1" = 100'<br>VERT. 1" = 5' |

STATE OF LOUISIANA
DEPARTMENT OF NATURAL RESOURCES
COASTAL RESTORATION DIVISION
NICHOLLS STATE UNIVERSITY
P.O. BOX 2079
THIBODAUX, LOUISIANA 70310

WHISKEY ISLAND RESTORATION
PROJECT - PHASE 3b
TE-27 / PTE15bii

BASELINE D-BACK BAY
CROSS-SECTIONS

| FEDERAL PROJECT NO. | STATE PROJECT NOS. | PARISH | SHEET NO. |
|---|---|---|---|
| PTE15bii | TE-27 | TERREBONNE | 23 |

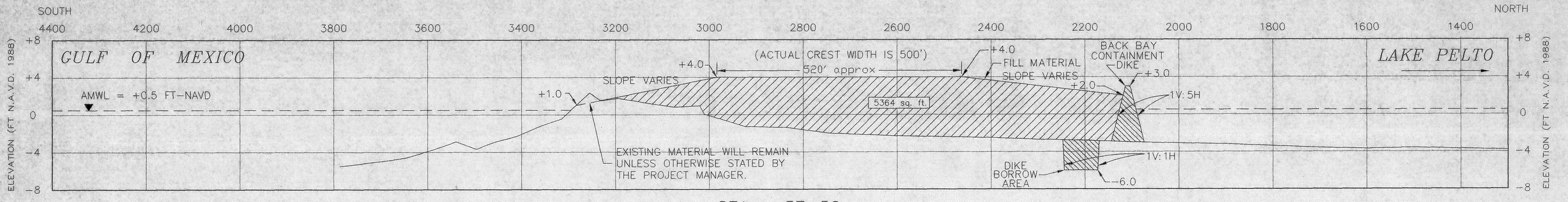


STA = 37+50

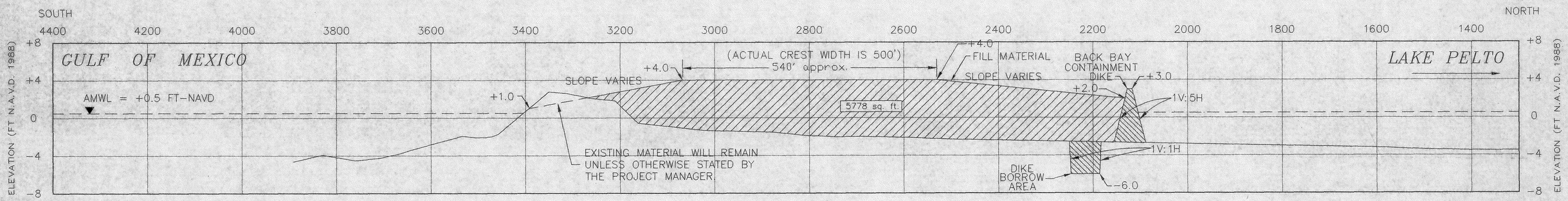


STA = 35+00

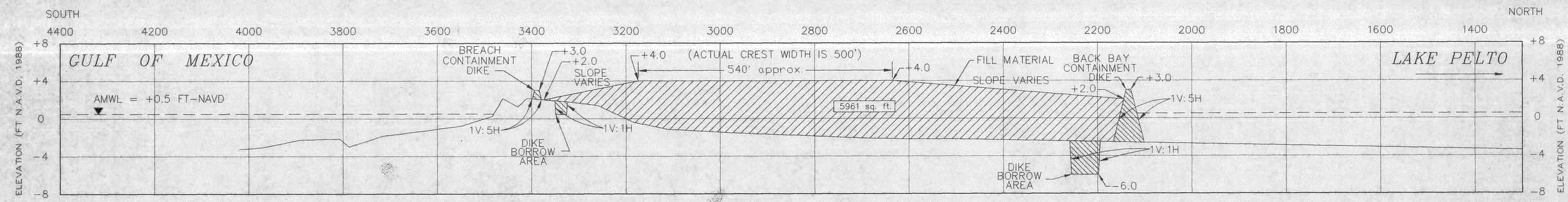


STA = 32+50

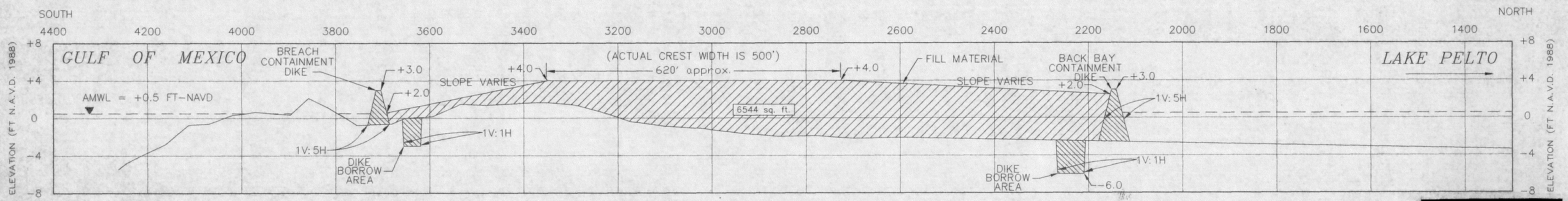


STA = 30+00

Note: Back Bay Cross-sections are not perpendicular to the centerline of the dune. (See Sheet No. 3)

Ref: Picciola and Associates Survey Drawings "Hydrographic and Topographic Survey, Whiskey Island Restoration Project Part1 (TE-27/PTE15bii), Terrebonne Parish, LA" Dated 8/14/97, Sheets 1-13.

| DATE | REVISIONS | APPROVED |
|---|---|---|
| | | |
| | | |
| | | |
| | | |

STATE OF LOUISIANA
D. BRIAN KENDRICK
REG. No. 24072
REGISTERED
PROFESSIONAL ENGINEER
IN
CIVIL ENGINEERING
10/16/97

| | |
|---|---|
| DRAWN BY: | HJT/JDF |
| APPROVED BY: | DBK/ALL |
| DATE: | 10/7/97 |
| SCALE: | HORZ. 1" = 100' VERT. 1" = 5' |

STATE OF LOUISIANA
DEPARTMENT OF NATURAL RESOURCES
COASTAL RESTORATION DIVISION
NICHOLLS STATE UNIVERSITY
P.O. BOX 2079
THIBODAUX, LOUISIANA 70310

WHISKEY ISLAND RESTORATION
PROJECT - PHASE 3b
TE-27 / PTE15bii

BASELINE D-BACK BAY
CROSS-SECTIONS

[redacted]

| FEDERAL PROJECT NO. | STATE PROJECT NOS. | PARISH | SHEET NO. |
|---|---|---|---|
| PTE15bii | TE-27 | TERREBONNE | 24 |

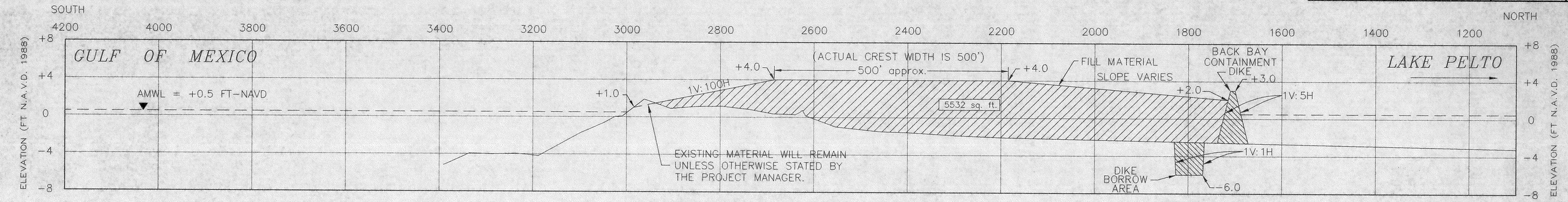


STA = 47+50

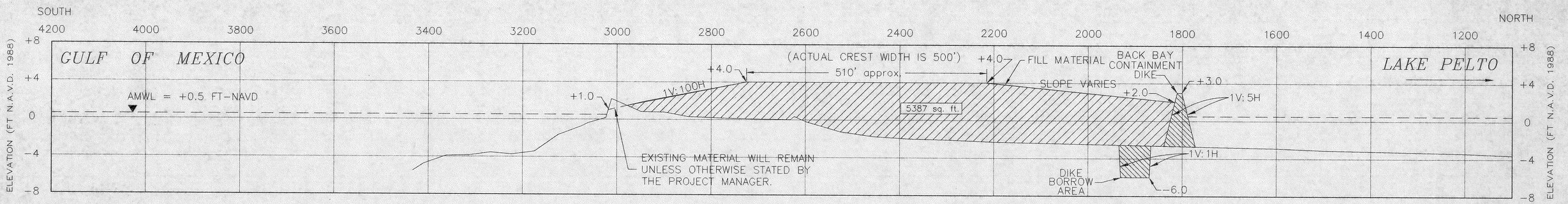


STA = 45+00

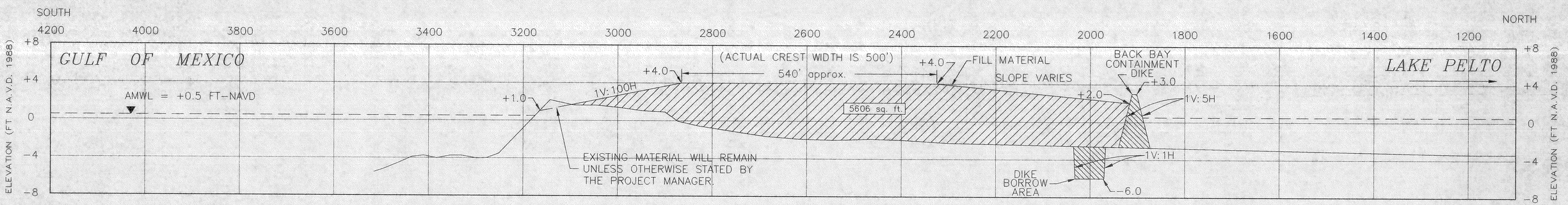


STA = 42+50

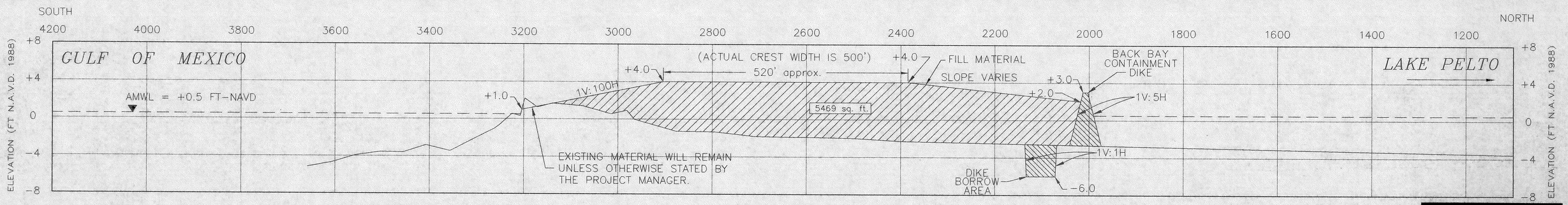


STA = 40+00

[redacted]

Note: Back Bay Cross-sections are not perpendicular to the centerline of the dune. (See Sheet No. 3)

Ref: Picciola and Associates Survey Drawings "Hydrographic and Topographic Survey, Whiskey Island Restoration Project Part1 (TE-27/PTE15bii), Terrebonne Parish, LA" Dated 8/14/97, Sheets 1-13.

| DATE | REVISIONS | APPROVED |
|---|---|---|
| | | |
| | | |
| | | |
| | | |

STATE OF LOUISIANA
D. BRIAN KENDRICK
REG. NO. 24672
REGISTERED PROFESSIONAL ENGINEER IN CIVIL ENGINEERING
1/4/99

DRAWN BY: HJT/JDF
APPROVED BY: DBK/ALL
DATE : 10/7/97
SCALE : HORZ. 1" = 100' VERT. 1" = 5'

STATE OF LOUISIANA
DEPARTMENT OF NATURAL RESOURCES
COASTAL RESTORATION DIVISION
NICHOLLS STATE UNIVERSITY
P.O. BOX 2079
THIBODAUX, LOUISIANA 70310

WHISKEY ISLAND RESTORATION
PROJECT - PHASE 3b
TE-27 / PTE15bii

BASELINE D-BACK BAY
CROSS-SECTIONS

| FEDERAL PROJECT NO. | STATE PROJECT NOS. | PARISH | SHEET NO. |
|---|---|---|---|
| PTE15bii | TE-27 | TERREBONNE | 25 |

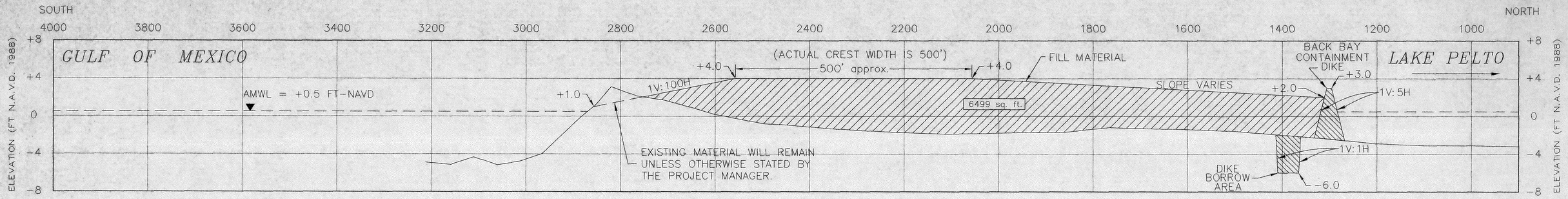


STA = 57+50

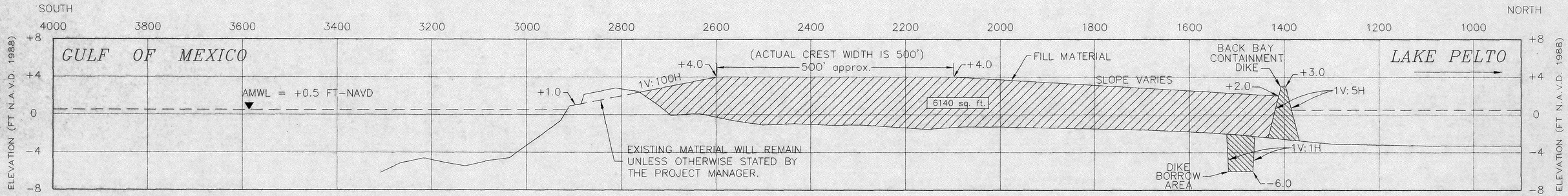


STA = 55+00

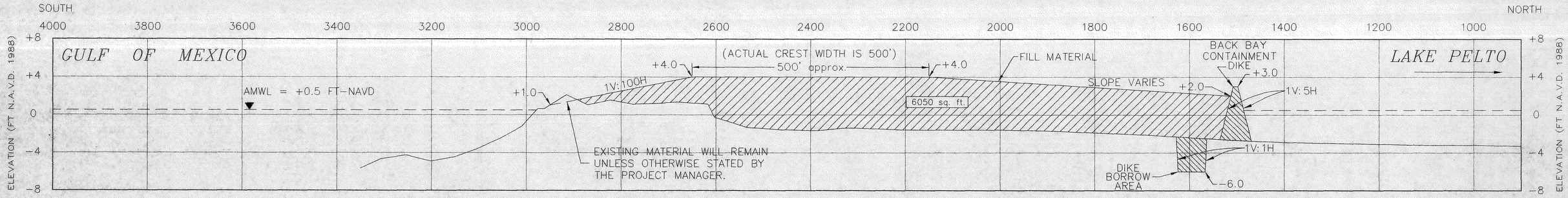


STA = 52+50

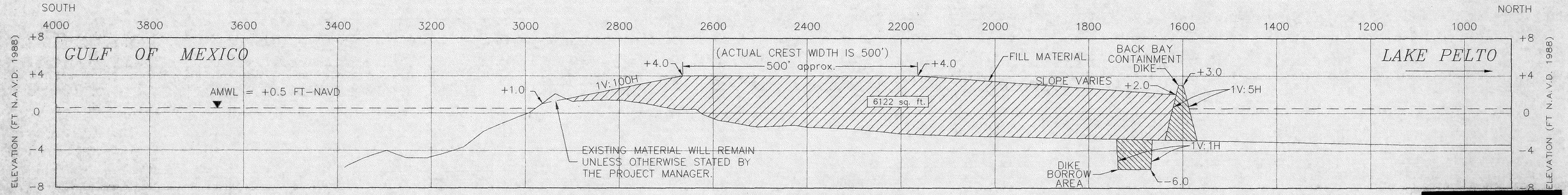


STA = 50+00

[redacted]

Note: Back Bay Cross-sections are not perpendicular to the centerline of the dune. (See Sheet No. 3)

Ref: Picciola and Associates Survey Drawings "Hydrographic and Topographic Survey, Whiskey Island Restoration Project Part1 (TE-27/PTE15bii), Terrebonne Parish, LA" Dated 8/14/97, Sheets 1-13.

| DATE | REVISIONS | APPROVED |
|---|---|---|
| | | |
| | | |
| | | |
| | | |

STATE OF LOUISIANA
D. BRIAN KENDRICK
REG. NO. 24077
PROFESSIONAL ENGINEER IN CIVIL ENGINEERING
10/7/97

DRAWN BY: HJT/JDF
APPROVED BY: DBK/ALL
DATE: 10/7/97
SCALE: HORZ. 1" = 100' VERT. 1" = 5'

STATE OF LOUISIANA
DEPARTMENT OF NATURAL RESOURCES
COASTAL RESTORATION DIVISION
NICHOLLS STATE UNIVERSITY
P.O. BOX 2079
THIBODAUX, LOUISIANA 70310

WHISKEY ISLAND RESTORATION
PROJECT - PHASE 3b
TE-27 / PTE15bii

BASELINE D-BACK BAY
CROSS-SECTIONS

| FEDERAL PROJECT NO. | STATE PROJECT NOS. | PARISH | SHEET NO. |
|---|---|---|---|
| PTE15bii | TE-27 | TERREBONNE | 26 |

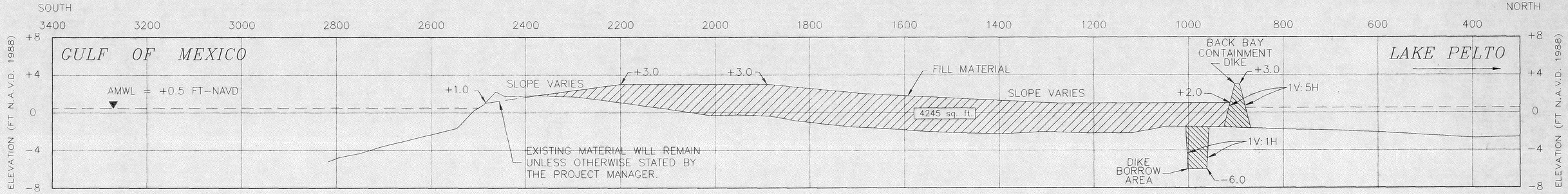


STA = 67+50

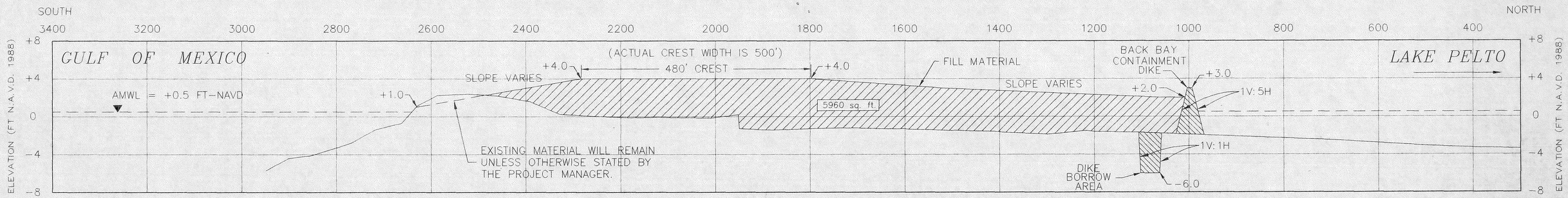


STA = 65+00

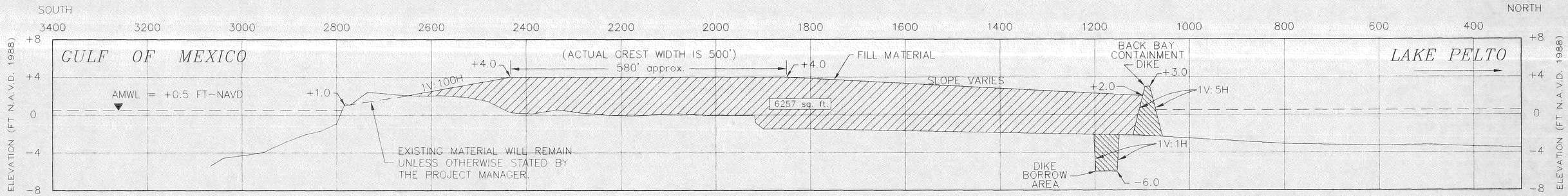


STA = 62+50

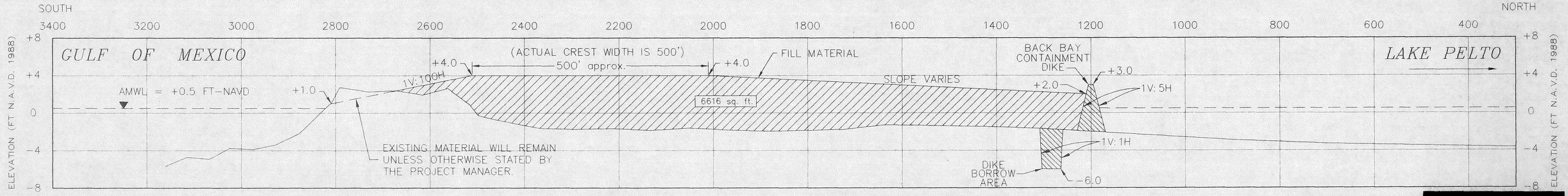


STA = 60+00

[redacted]

Note: Back Bay Cross-sections are not perpendicular to the centerline of the dune. (See Sheet No. 3)

Ref: Picciola and Associates Survey Drawings "Hydrographic and Topographic Survey, Whiskey Island Restoration Project Part1 (TE-27/PTE15bii), Terrebonne Parish, LA" Dated 8/14/97, Sheets 1-13.

| DATE | REVISIONS | APPROVED |
|---|---|---|
| | | |
| | | |
| | | |
| | | |

STATE OF LOUISIANA
D. BRIAN KENDRICK
REG. No. 24872
PROFESSIONAL ENGINEER IN CIVIL ENGINEERING
11/6/97

DRAWN BY: HJT/JDF
APPROVED BY: DBK/ALL
DATE: 10/7/97
SCALE: HORZ. 1" = 100' VERT. 1" = 5'

STATE OF LOUISIANA
DEPARTMENT OF NATURAL RESOURCES
COASTAL RESTORATION DIVISION
NICHOLLS STATE UNIVERSITY
P.O. BOX 2079
THIBODAUX, LOUISIANA 70310

WHISKEY ISLAND RESTORATION PROJECT - PHASE 3b
TE-27 / PTE15bii

BASELINE D-BACK BAY CROSS-SECTIONS