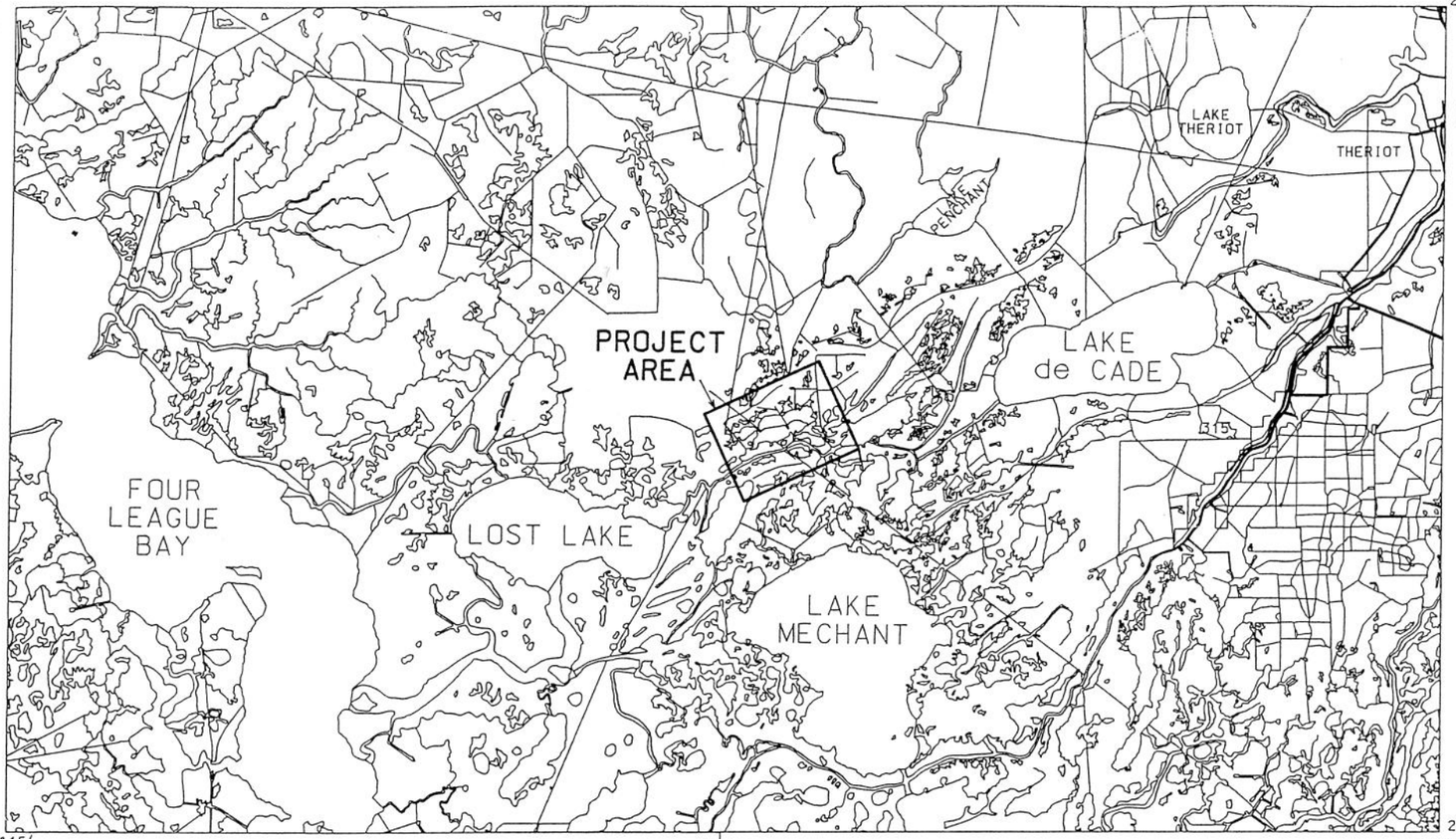

BRADY CANAL HYDROLOGIC RESTORATION

CONSTRUCTION UNIT 1,(PTE-26B)

BUILT UNDER THE
COASTAL WETLANDS
PLANNING, PROTECTION,
AND
RESTORATION ACT
PUBLIC LAW 101-646

BY THE
LOUISIANA
DEPARTMENT OF NATURAL RESOURCES

WITH THE ASSISTANCE OF THE
NATURAL RESOURCES CONSERVATION SERVICE
OF THE
UNITED STATES DEPARTMENT OF AGRICULTURE
1999

VICINITY MAP

1 0 1 2 3
SCALE IN MILES

LOCATION
IN
LOUISIANA

N

INDEX OF DRAWINGS

1 COVER SHEET
2 PROJECT LOCATION MAP
3 PROPOSED EMBANKMENT - PLAN VIEW
4 EMBANKMENT PROFILE - 0+00 - 30+00
5 EMBANKMENT PROFILE - 30+00-60+00
6 EMBANKMENT PROFILE - 60+00-90+00
7 EMBANKMENT PROFILE - 90+00-120+00
8 EMBANKMENT PROFILE - 120+00-150+00
9 EMBANKMENT PROFILE - 150+00-177+63
10 TYPICAL SECTIONS

COPY

Date
Approved by
Title
Date
Designed C. E. LaFleur 02/98
Drawn A. J. Gremillion 02/98
Traced
Checked James N. Moore 01/99
Title

COVER SHEET
CONSTRUCTION UNIT NO. 1
BRADY CANAL HYD. REST. - PTE-26B
TERREBONNE PARISH, LOUISIANA

U.S. DEPARTMENT OF AGRICULTURE - NATURAL RESOURCES CONSERVATION SERVICE

REVISIONS
DATE | APPR. | TITLE

CAD FILE NO.
LA-231

DRAWING NO.
231_02

SHEET NO 1 OF 10

c:\jdrawlls:231\231-02.dgn Feb 14 1999 15:24:39

NOTE:
KNOWN PIPELINES AND UTILITIES ARE SHOWN ON THE PLANS. IT IS POSSIBLE THAT SOME MAY EXIST THAT HAVE NOT BEEN SHOWN. THE CONTRACTOR SHALL BE ON THE ALERT FOR SUCH PIPELINES AND UTILITES, AND SHALL REPORT THEM IMMEDIATELY TO THE CONTRACTING OFFICER.

NOTICE:
48 HOURS BEFORE DIGGING
CALL 1-800-272-3020
TO LOCATE UTILITY LINES

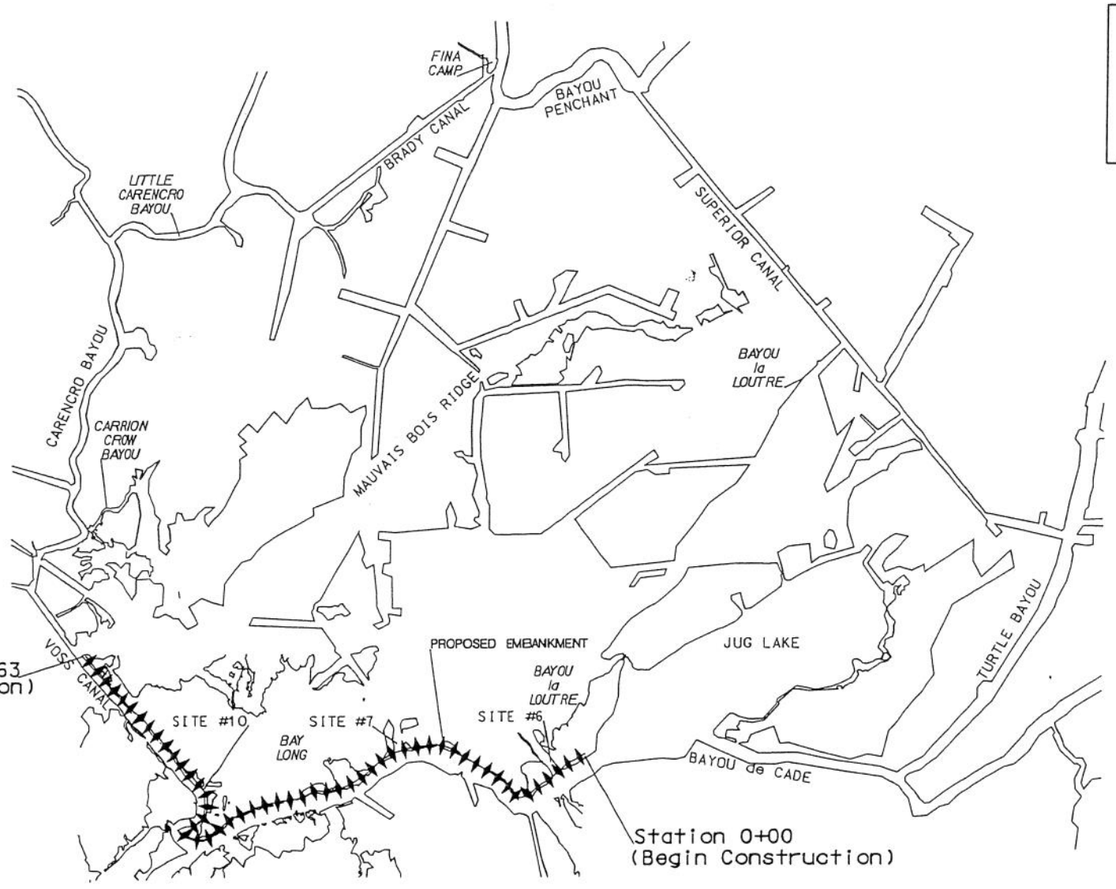

PROJECT LOCATION MAP

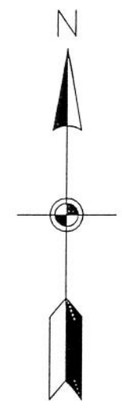

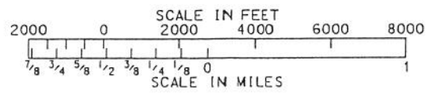

NOTES:

1. ALL ELEVATIONS ARE BASED ON NAVD 88 DATUM.
2. KNOWN UTILITIES ARE SHOWN ONLY ON THE PROPOSED EMBANKMENT-PLAN VIEW (SHEET 3 OF 10).
3. SEE SHEET 3 OF 10 FOR LAND RIGHTS INFORMATION.
4. THE FINAL ALINGNMENT OF THE EARTHEN EMBANKMENT WILL BE STAKED IN THE FIELD BY THE COTR.

STATE OF LOUISIANA
L. BIERLING III
REG. NO. 1033
REGISTERED PROFESSIONAL ENGINEER
IN
CIVIL ENGINEERING

		Date	
Designed	C. E. LaFleur	11/97	Approved by
Drawn	A. J. Gremillion	11/97	Title
Traced			
Checked	James N. Moore	01/99	Title

PROJECT LOCATION MAP
CONSTRUCTION UNIT NO. 1
BRADY CANAL HYD. REST. - PTE-26B
TERREBONNE PARISH, LOUISIANA

U.S. DEPARTMENT OF AGRICULTURE - NATURAL RESOURCES CONSERVATION SERVICE

REVISIONS			
DATE	APPR.	TITLE	

CAD FILE NO.
LA-231
DRAWING NO.
PROJECT
SHEET NO 2 OF 10

c:\drawls-231\project.dgn Feb 14 1999 15:40:46

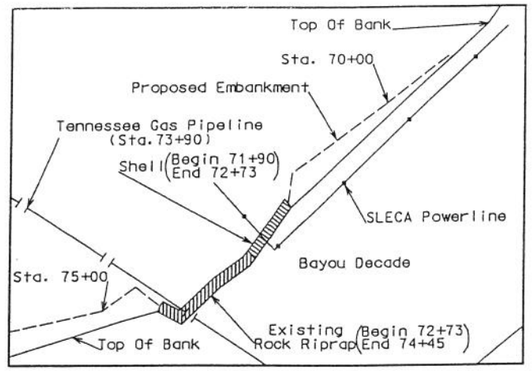

INSET NO. 3

100 0 100 200 300 400
SCALE IN FEET

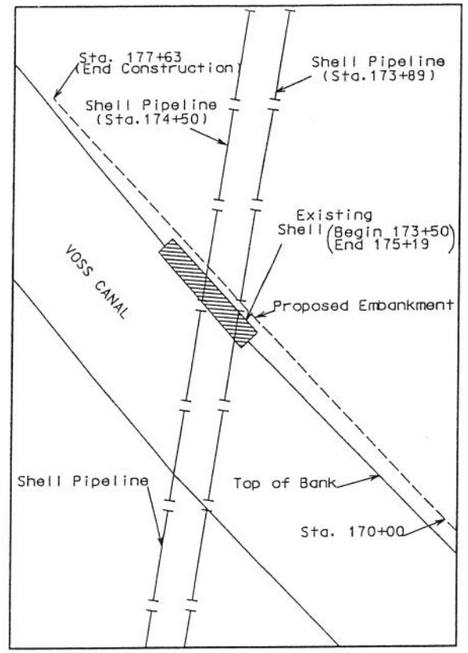

INSET NO. 2

100 0 100 200 300 400
SCALE IN FEET

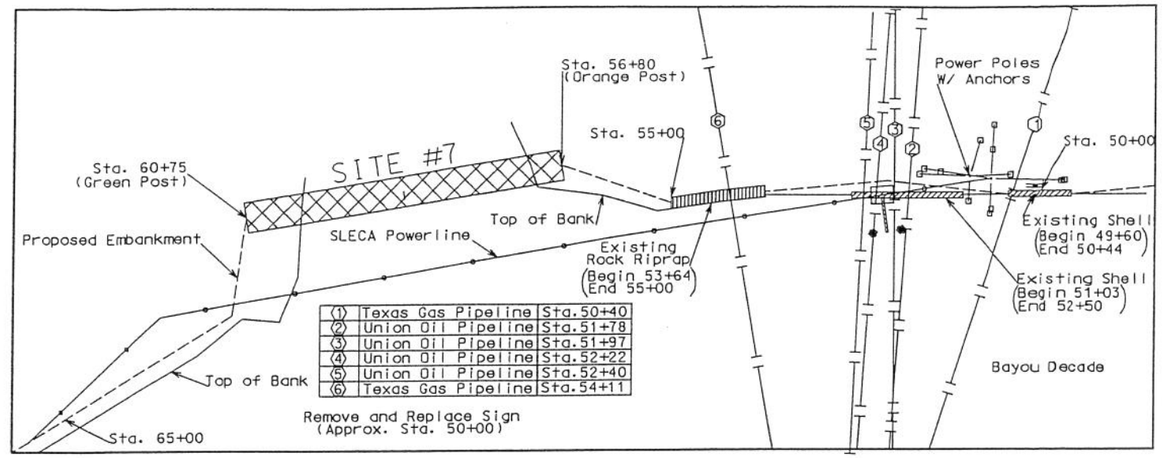

(1)	Texas Gas Pipeline	Sta.50+40
(2)	Union Oil Pipeline	Sta.51+78
(3)	Union Oil Pipeline	Sta.51+97
(4)	Union Oil Pipeline	Sta.52+22
(5)	Union Oil Pipeline	Sta.52+40
(6)	Texas Gas Pipeline	Sta.54+11

INSET NO. 1

100 0 100 200 300 400
SCALE IN FEET

EMBANKMENT SCHEDULE

STA. 0+00 TO STA. 6+85	EARTHEN EMBANKMENT
STA. 6+85 TO STA. 10+13	SITE NO. 6 (SEE CU #2)
STA. 10+13 TO STA. 17+30	EARTHEN EMBANKMENT
STA. 17+30 TO STA. 22+50	ROCK EMBANKMENT (BASE BID)
STA. 22+50 TO STA. 25+60	EARTHEN EMBANKMENT
STA. 25+60 TO STA. 42+40	ROCK EMBANKMENT (BASE BID)
STA. 42+40 TO STA. 45+20	EARTHEN EMBANKMENT
STA. 45+20 TO STA. 47+50	ROCK EMBANKMENT (ADDITIVE A)
STA. 47+50 TO STA. 49+70	ROCK EMBANKMENT (ADDITIVE B)
STA. 49+70 TO STA. 50+30	EARTHEN EMBANKMENT
STA. 50+30 TO STA. 51+50	ROCK EMBANKMENT (ADDITIVE C)
STA. 51+50 TO STA. 52+50	ROCK EMBANKMENT (WITH ROCK FILL BASE)
STA. 52+50 TO STA. 56+80	EARTHEN EMBANKMENT
STA. 56+80 TO STA. 60+75	SITE NO. 7 (SEE CU #2)
STA. 60+75 TO STA. 137+93	EARTHEN EMBANKMENT
STA. 137+93 TO STA. 141+02	SITE NO. 10 (SEE CU #2)
STA. 141+02 TO STA. 177+63	EARTHEN EMBANKMENT

NOTE:
THE FINAL ALIGNMENT WILL BE STAKED IN THE FIELD BY THE COTR.

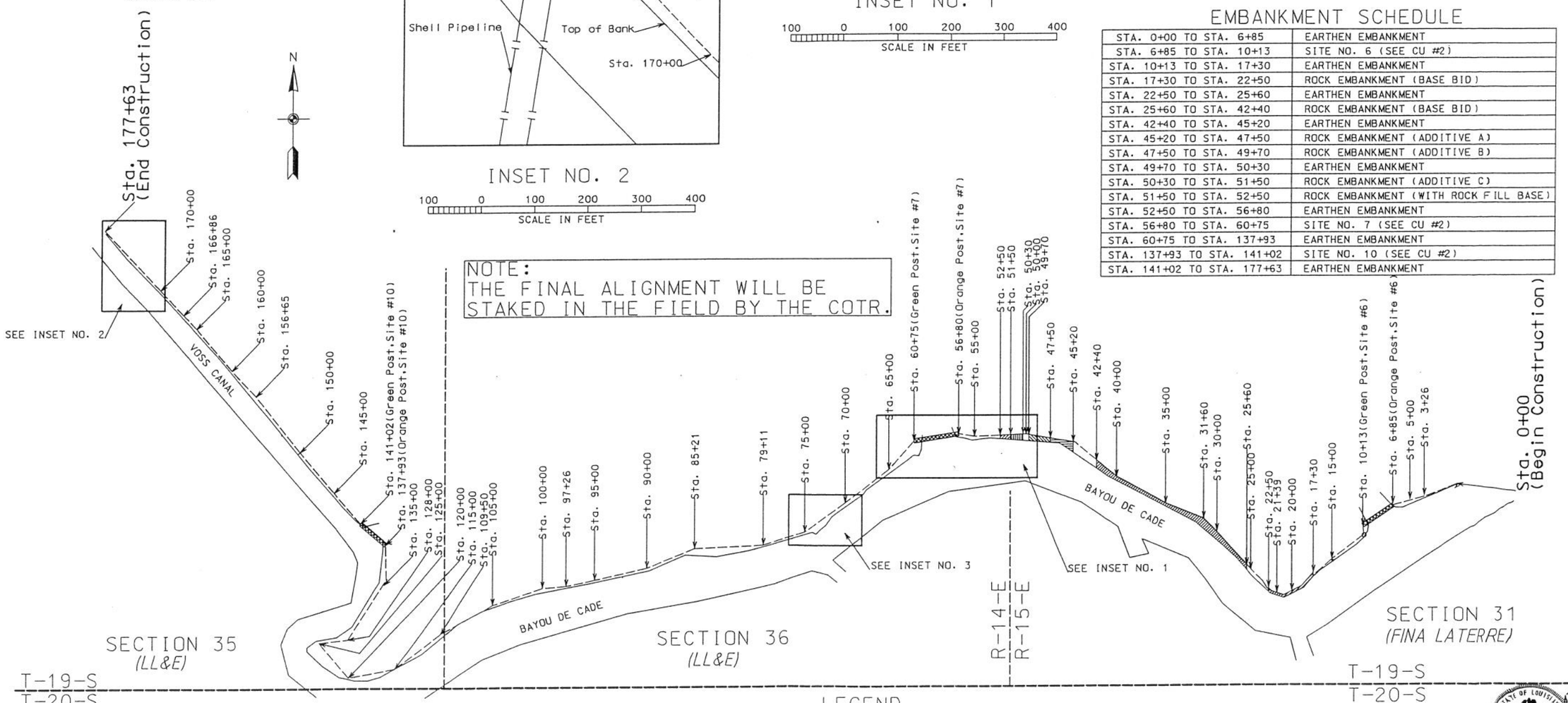

PLAN MAP

500 0 500 1000 1500 2000
SCALE IN FEET

LEGEND

- PROPOSED ROCK EMBANKMENT-(BASE BID)
- PROPOSED ROCK EMBANKMENT-(ADDITIVE A)
- PROPOSED ROCK EMBANKMENT-(ADDITIVE B)
- PROPOSED ROCK EMBANKMENT-(ADDITIVE C)
- PROPOSED/EXISTING STRUCTURE LOCATION
- APPROXIMATE LOCATION OF PROPOSED EMBANKMENT
- EXISTING TOP BANK OF CHANNEL

STATE OF LOUISIANA — STERLING, III — REGISTERED PROFESSIONAL ENGINEER IN CIVIL ENGINEERING

Date
Approved by
Date 11/97 Title
Designed C. E. LaFleur 11/97 Title
Drawn A. J. Gremillion
Traced
Checked James N. Moore 01/99 Title

PROPOSED EMBANKMENT - PLAN VIEW
CONSTRUCTION UNIT NO. 1
BRADY CANAL HYD. REST. - PTE-26B
TERREBONNE PARISH, LOUISIANA

U.S. DEPARTMENT OF AGRICULTURE - NATURAL RESOURCES CONSERVATION SERVICE

DATE	APPR.	REVISIONS	TITLE

CAD FILE NO. LA-231
DRAWING NO. EMBANK
SHEET NO 3 OF 10

c:\tdrawls-231\embank.dgn Feb 14 1999 15:47:41

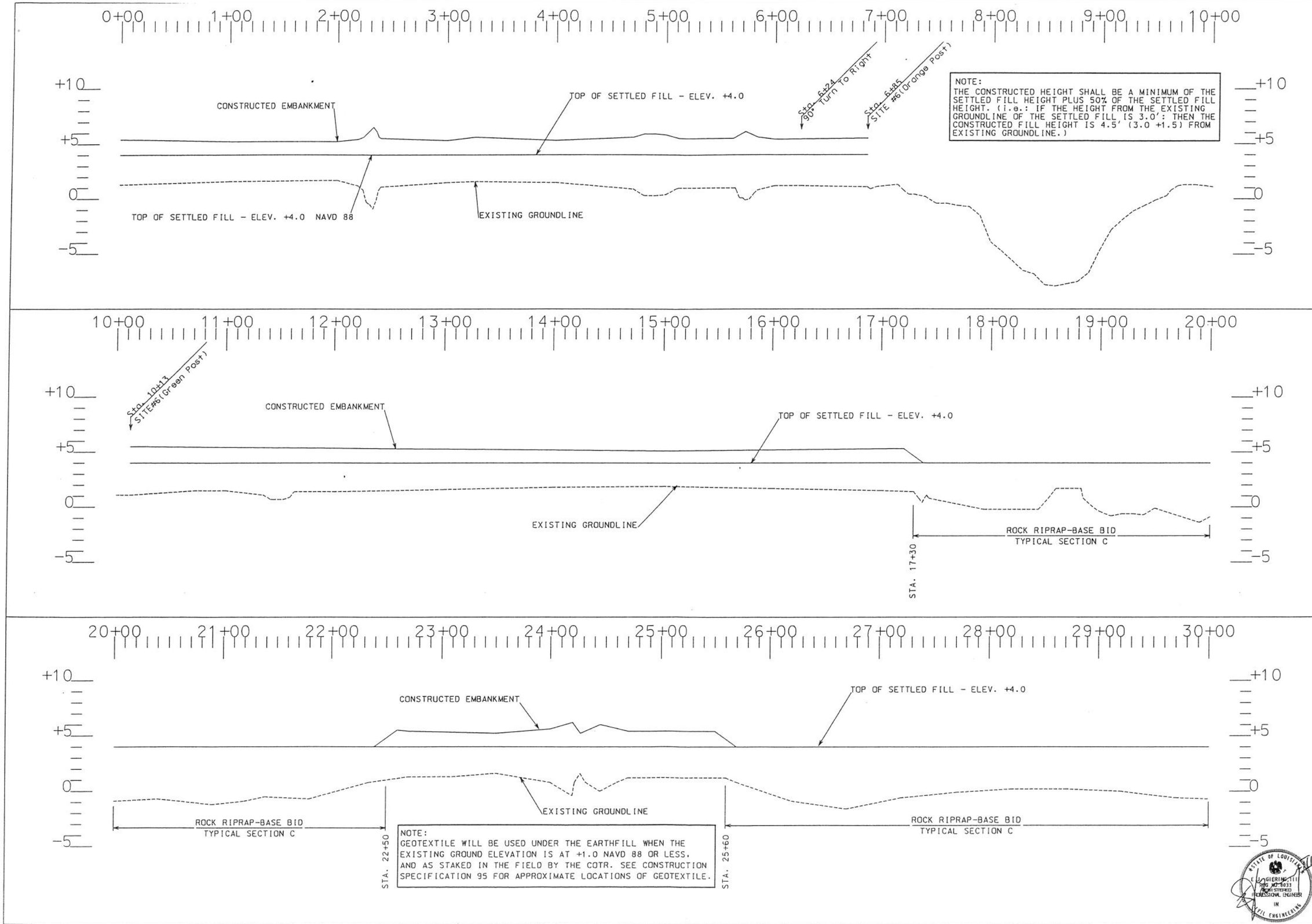

NOTE:
THE CONSTRUCTED HEIGHT SHALL BE A MINIMUM OF THE SETTLED FILL HEIGHT PLUS 50% OF THE SETTLED FILL HEIGHT. (i.e.: IF THE HEIGHT FROM THE EXISTING GROUNDLINE OF THE SETTLED FILL IS 3.0': THEN THE CONSTRUCTED FILL HEIGHT IS 4.5' (3.0 +1.5) FROM EXISTING GROUNDLINE.)

NOTE:
GEOTEXTILE WILL BE USED UNDER THE EARTHFILL WHEN THE EXISTING GROUND ELEVATION IS AT +1.0 NAVD 88 OR LESS, AND AS STAKED IN THE FIELD BY THE COTR. SEE CONSTRUCTION SPECIFICATION 95 FOR APPROXIMATE LOCATIONS OF GEOTEXTILE.

STATE OF LOUISIANA
E. LANGIERI III
NO. 20-14033
REGISTERED
PROFESSIONAL ENGINEER
IN
CIVIL ENGINEERING

Date
Approved by
Title
Title

Designed Cherie E. LaFleur 11/97
Drawn A. J. Gremillion 11/97
Traced
Checked James N. Moore 01/99

EMBANKMENT PROFILE - 0+00 - 30+00
CONSTRUCTION UNIT NO. 1
BRADY CANAL HYD. REST. - PTE-26B
TERREBONNE PARISH, LOUISIANA

U.S. DEPARTMENT OF AGRICULTURE - NATURAL RESOURCES CONSERVATION SERVICE

REVISIONS		
DATE	APPR.	TITLE

CAD FILE NO.
LA-231

DRAWING NO.
EMBANK-0-30

SHEET NO 4 OF 10

c:\drawls-231\embank-0-30.dgn Feb 14 1999 16:00:01

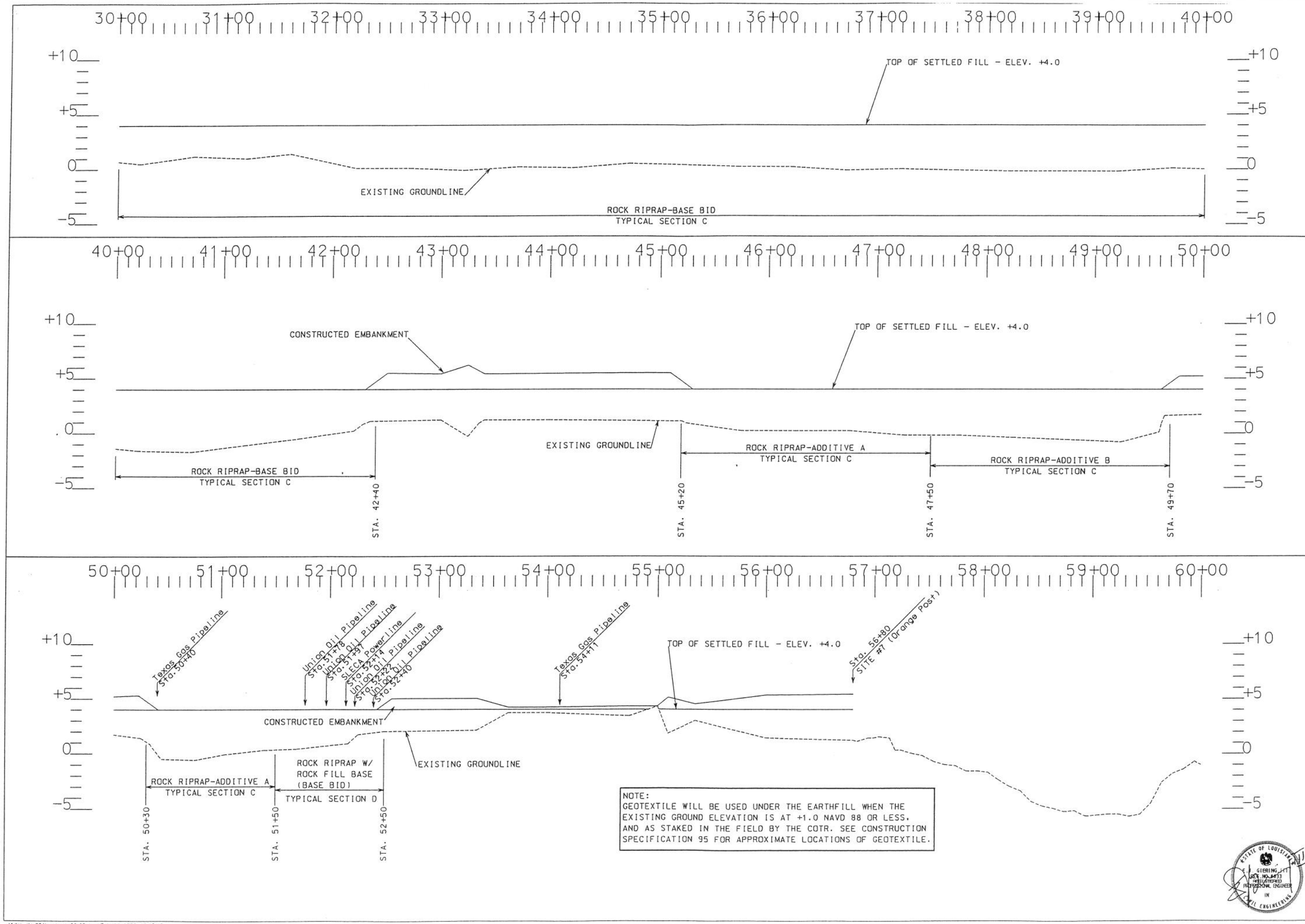

NOTE:
GEOTEXTILE WILL BE USED UNDER THE EARTHFILL WHEN THE EXISTING GROUND ELEVATION IS AT +1.0 NAVD 88 OR LESS, AND AS STAKED IN THE FIELD BY THE COTR. SEE CONSTRUCTION SPECIFICATION 95 FOR APPROXIMATE LOCATIONS OF GEOTEXTILE.

STATE OF LOUISIANA
E. J. GIERING III
REGISTERED PROFESSIONAL ENGINEER IN CIVIL ENGINEERING

Date
Approved by
Title
Date
Designed C. E. La Fleur 11/97
Drawn A. J. Gremillion 11/97
Traced
Checked James N. Moore 01/99
Title

EMBANKMENT PROFILE - 30+00-60+00
CONSTRUCTION UNIT NO. 1
BRADY CANAL HYD. RESTOR. - PTE-26B
TERRBONNE PARISH, LOUISIANA

U.S. DEPARTMENT OF AGRICULTURE - NATURAL RESOURCES CONSERVATION SERVICE

REVISIONS		
DATE	APPR.	TITLE

CAD FILE NO.
LA-231
DRAWING NO.
EMBANK-30-60
SHEET NO 5 OF 10

\\drawlla-231\embank-30-60.dgn Feb 14 1999 16:15:46

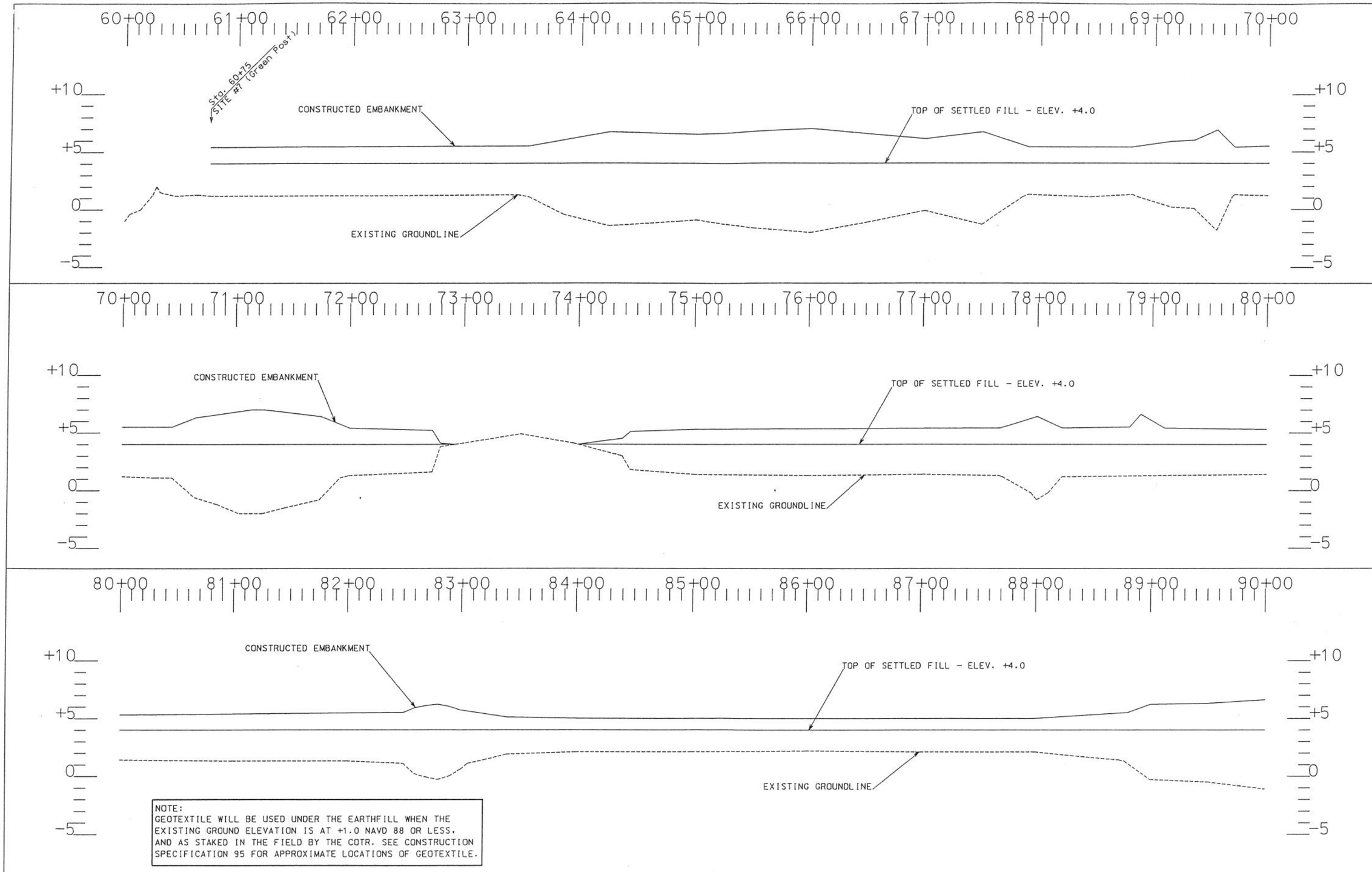

NOTE:
GEOTEXTILE WILL BE USED UNDER THE EARTHFILL WHEN THE EXISTING GROUND ELEVATION IS AT +1.0 NAVD 88 OR LESS. AND AS STAKED IN THE FIELD BY THE COTR. SEE CONSTRUCTION SPECIFICATION 95 FOR APPROXIMATE LOCATIONS OF GEOTEXTILE.

STATE OF LOUISIANA
E.D. GIERING III
LICENSE NO. 18633
REGISTERED PROFESSIONAL ENGINEER IN CIVIL ENGINEERING

Date
Approved by
Title
Date
Designed C. E. La Fleur 11/97
Drawn A. J. Gremillion 11/97
Traced
Checked James N. Moore 01/99
Title

EMBANKMENT PROFILE 60+00 - 90+00
CONSTRUCTION UNIT NO. 1
BRADY CANAL HYD. REST. - PTE-26B
TERRBONNE PARISH, LOUISIANA

U.S. DEPARTMENT OF AGRICULTURE - NATURAL RESOURCES CONSERVATION SERVICE

REVISIONS			
DATE	APPR.	TITLE	

CAD FILE NO.
LA-231

DRAWING NO.
EMBANK-60-90

SHEET NO 6 OF 10

\\drawlla-231\embank-60-90.dgn Feb 14, 1999 16:19:49

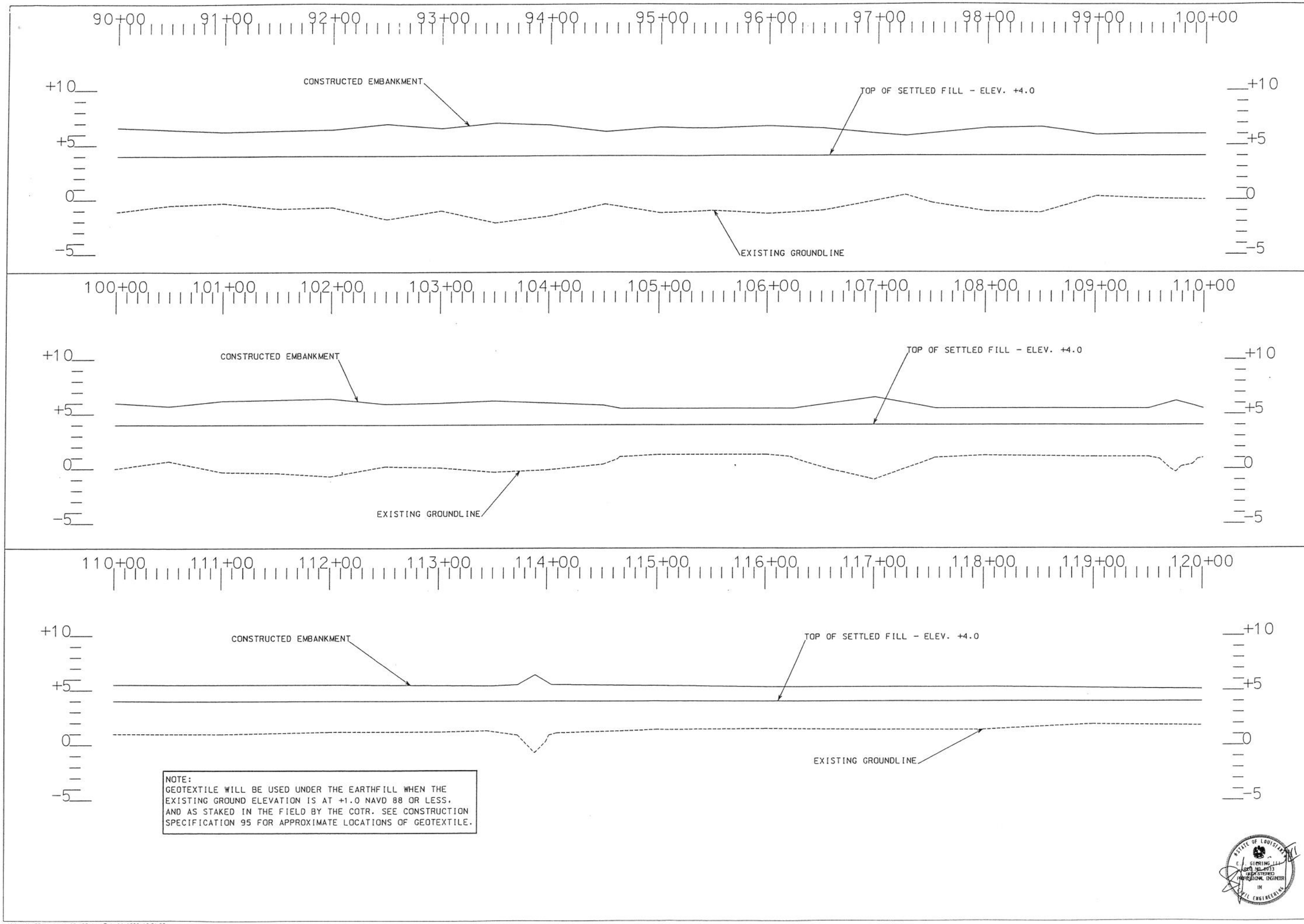

NOTE:
GEOTEXTILE WILL BE USED UNDER THE EARTHFILL WHEN THE EXISTING GROUND ELEVATION IS AT +1.0 NAVD 88 OR LESS, AND AS STAKED IN THE FIELD BY THE COTR. SEE CONSTRUCTION SPECIFICATION 95 FOR APPROXIMATE LOCATIONS OF GEOTEXTILE.

STATE OF LOUISIANA
E. J. GIERING III
REG. NO. 4933
REGISTERED PROFESSIONAL ENGINEER
IN
CIVIL ENGINEERING

		Date
Designed	C. E. LaFleur	11/97
Drawn	A. J. Gremillion	11/97
Traced		
Checked	James N. Moore	01/99

Approved by _____ Date _____
Title _____
Title _____

EMBANKMENT PROFILE-(90+00-120+00)
CONSTRUCTION UNIT NO. 1
BRADY CANAL HYD. REST. - PTE-26B
TERREBONNE PARISH, LOUISIANA

U.S. DEPARTMENT OF AGRICULTURE - NATURAL RESOURCES CONSERVATION SERVICE

REVISIONS			
DATE	APPR.	TITLE	

CAD FILE NO.
LA-231

DRAWING NO.
EMBANK-90-120

SHEET NO 7 OF 10

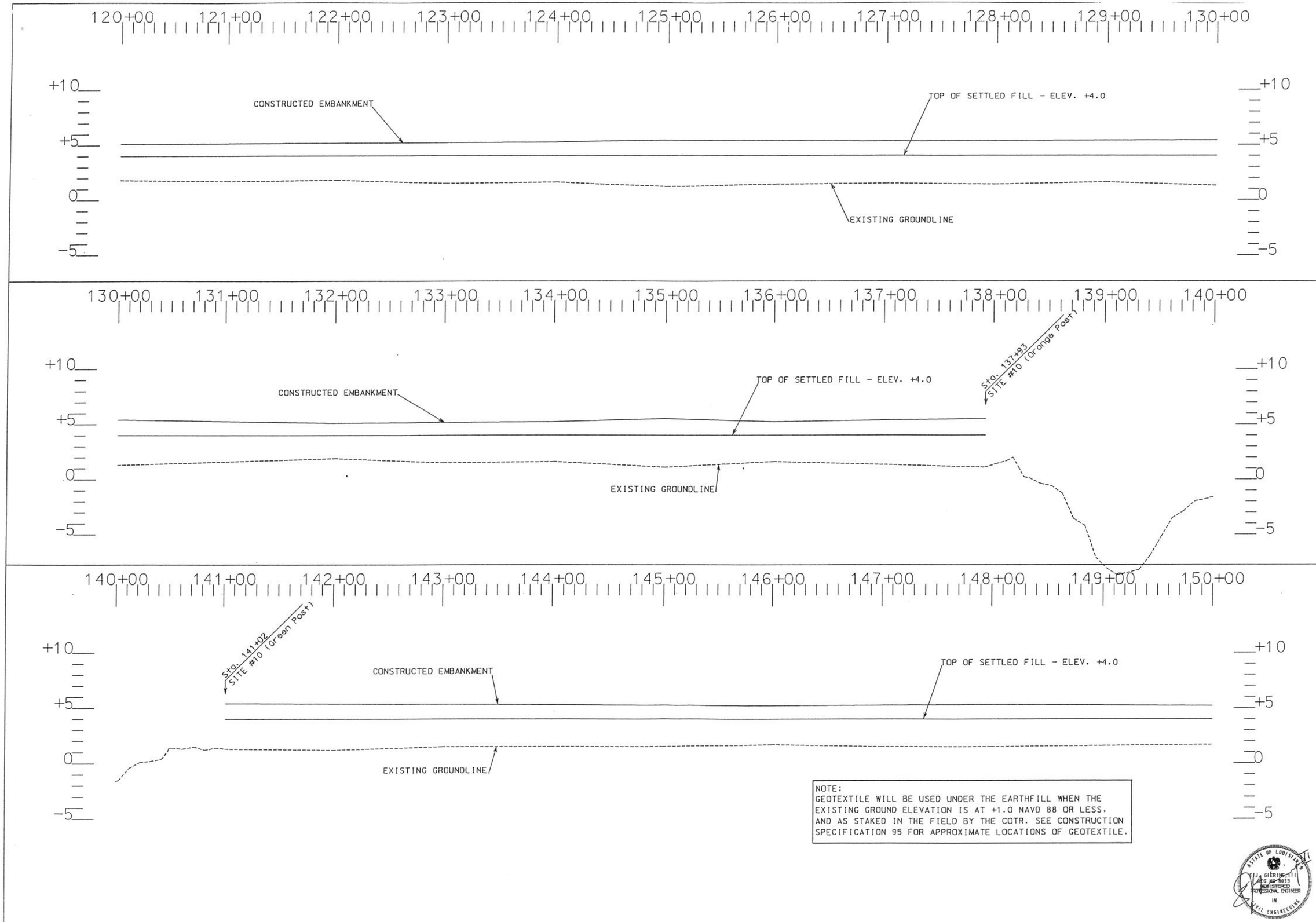

NOTE:
GEOTEXTILE WILL BE USED UNDER THE EARTHFILL WHEN THE EXISTING GROUND ELEVATION IS AT +1.0 NAVD 88 OR LESS, AND AS STAKED IN THE FIELD BY THE COTR. SEE CONSTRUCTION SPECIFICATION 95 FOR APPROXIMATE LOCATIONS OF GEOTEXTILE.

STATE OF LOUISIANA
ELIA GIERING III
REG NO 23633
REGISTERED PROFESSIONAL ENGINEER
IN
CIVIL ENGINEERING

Date
Approved by
Title
Date 11/97
Designed C. E. La Fleur
Drawn A. J. Gremillion 11/97
Traced
Checked James N. Moore 01/99
Title

EMBANKMENT PROFILE-(120+00-150+00)
CONSTRUCTION UNIT NO. 1
BRADY CANAL HYD. REST. - PTE-26B
TERRBONNE PARISH, LOUISIANA

U.S. DEPARTMENT OF AGRICULTURE - NATURAL RESOURCES CONSERVATION SERVICE

REVISIONS
DATE | APPR. | TITLE

CAD FILE NO.
LA-231

DRAWING NO.
EMBANK-120-150

SHEET NO 8 OF 10

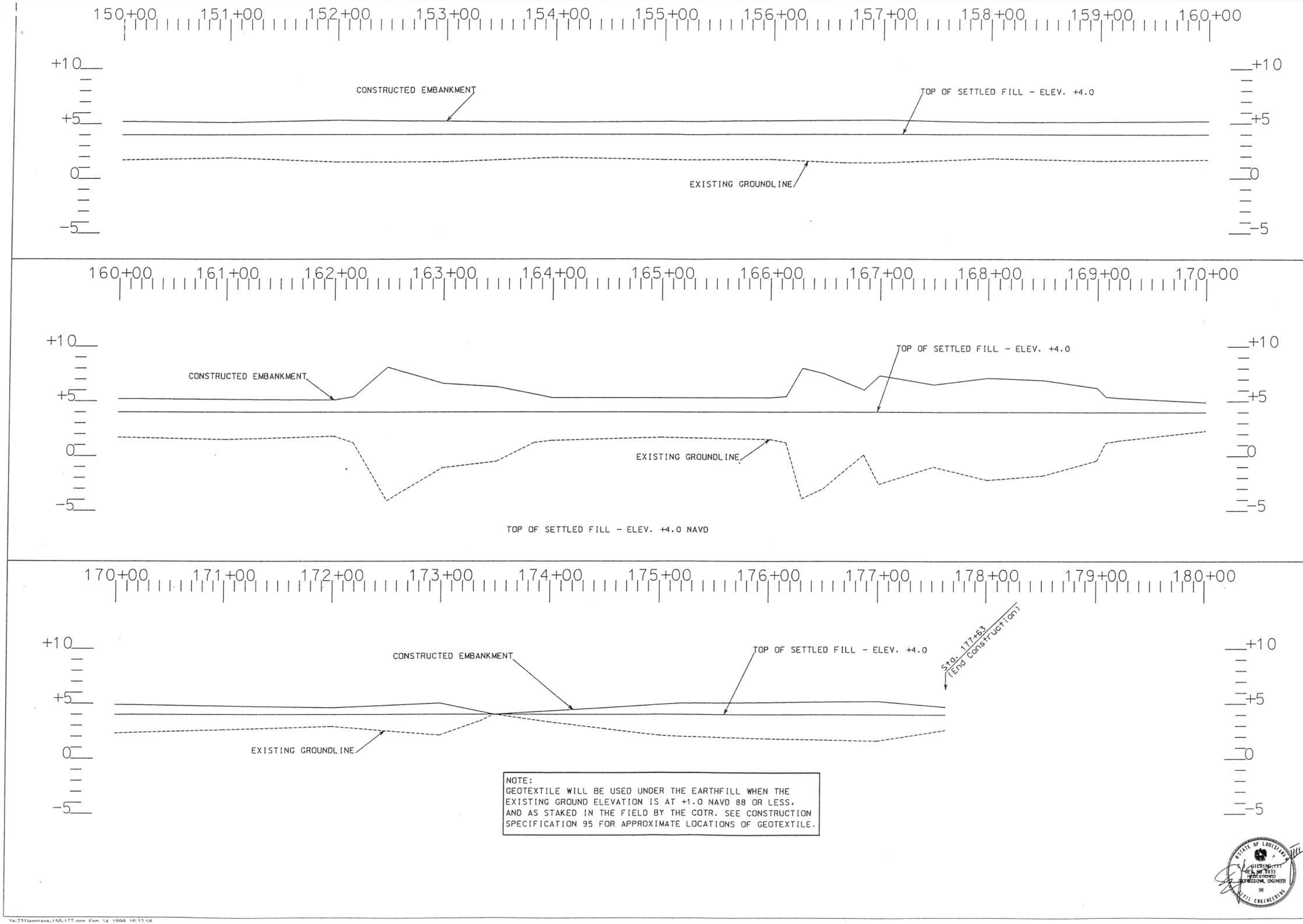

NOTE:
GEOTEXTILE WILL BE USED UNDER THE EARTHFILL WHEN THE EXISTING GROUND ELEVATION IS AT +1.0 NAVD 88 OR LESS, AND AS STAKED IN THE FIELD BY THE COTR. SEE CONSTRUCTION SPECIFICATION 95 FOR APPROXIMATE LOCATIONS OF GEOTEXTILE.

STATE OF LOUISIANA
S. J. GIERING III
NO. 23933
REGISTERED PROFESSIONAL ENGINEER IN CIVIL ENGINEERING

Date
Approved by
Title
Title

Designed C. E. LaFleur 11/97
Drawn A. J. Gremillion 11/97
Traced
Checked James N. Moore 01/99

EMBANKMENT PROFILE-(150+00-177+63)
CONSTRUCTION UNIT NO. 1
BRADY CANAL HYD. REST. - PTE-26B
TERRBONNE PARISH, LOUISIANA

U.S. DEPARTMENT OF AGRICULTURE - NATURAL RESOURCES CONSERVATION SERVICE

REVISIONS		
DATE	APPR.	TITLE

CAD FILE NO.
LA-231

DRAWING NO.
EMBANK-150-177

SHEET NO 9 OF 10

la231\embank150-177.dgn Feb 14 1999 16:12:58

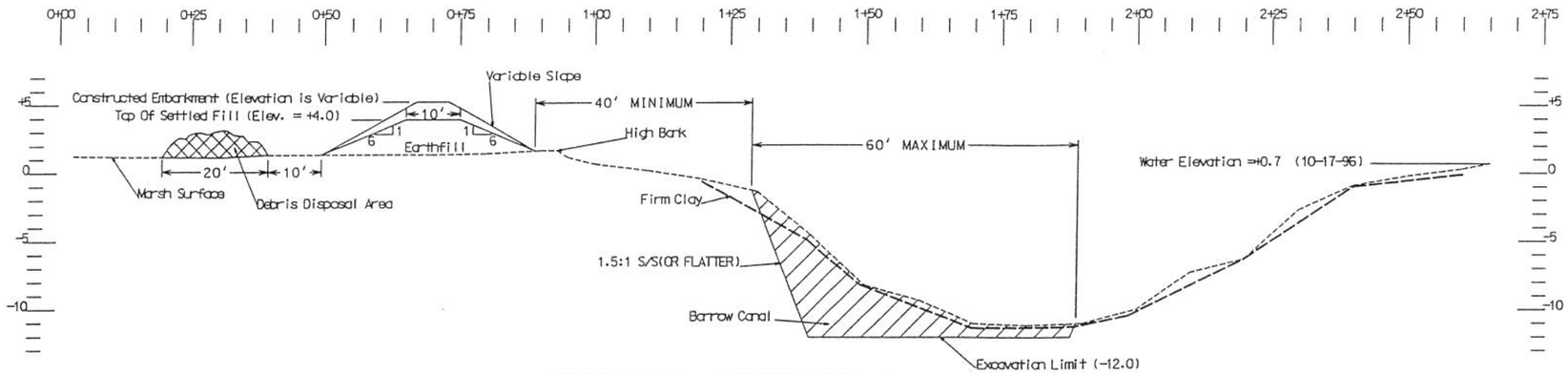

TYPICAL SECTION A

(WITHOUT GEOTEXTILE)

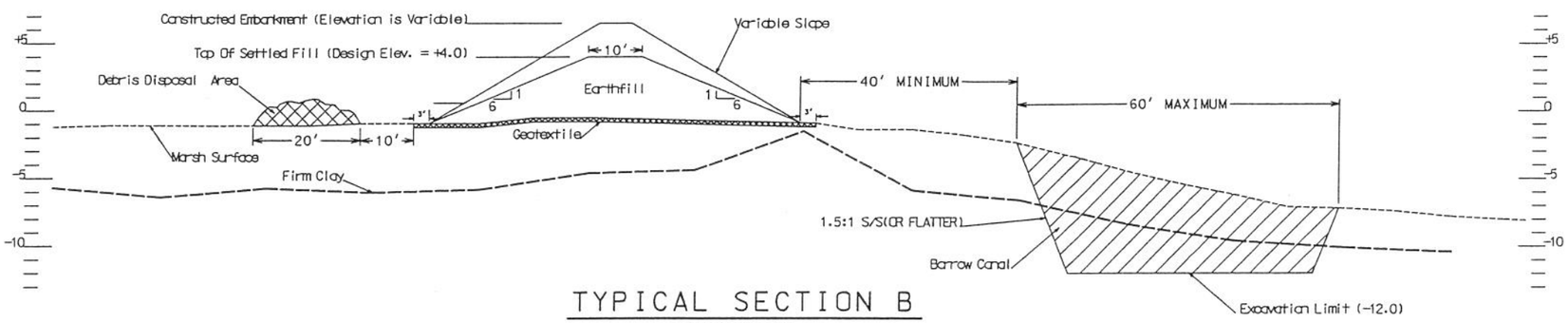

TYPICAL SECTION B

(WITH GEOTEXTILE)

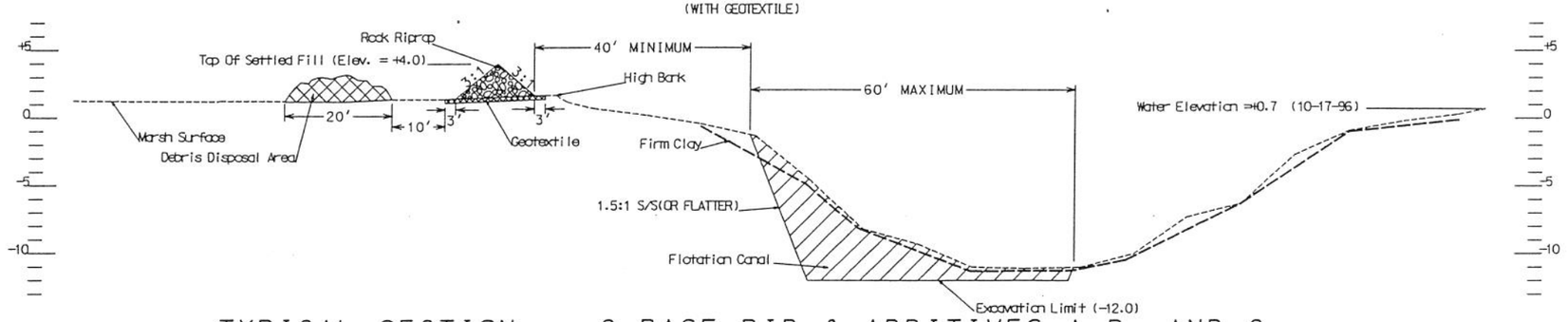

TYPICAL SECTION - C, BASE BID & ADDITIVES A, B, AND C

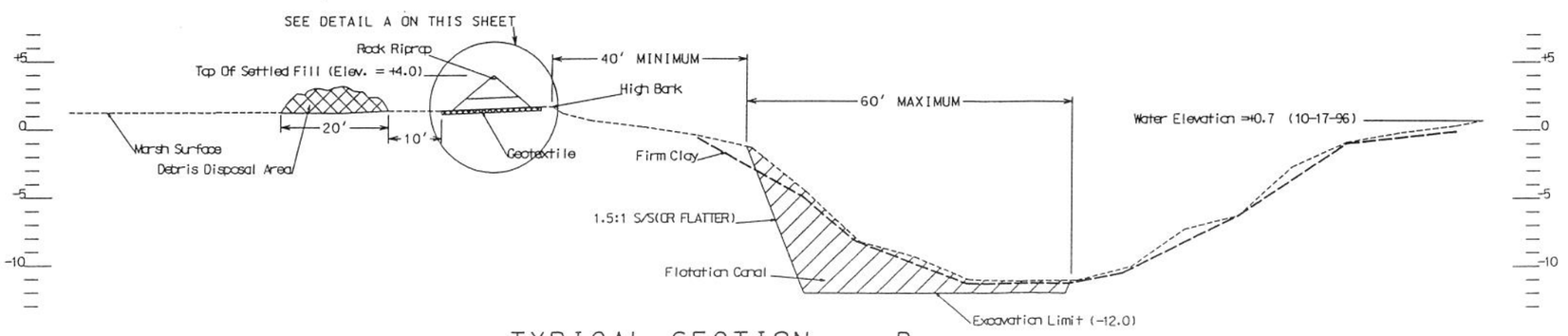

TYPICAL SECTION - D

TYPICAL SECTION FOR FILL OVER UNCOAL PIPELINE)

NOTE:
THE CONSTRUCTED HEIGHT SHALL BE A MINIMUM OF THE SETTLED FILL HEIGHT PLUS 50% OF THE SETTLED FILL HEIGHT. (i.e.: IF THE HEIGHT FROM THE EXISTING GROUNDLINE OF THE SETTLED FILL IS 3.0': THEN THE CONSTRUCTED FILL HEIGHT IS 4.5' (3.0 +1.5) FROM EXISTING GROUNDLINE.)

NOTE:
GEOTEXTILE WILL BE USED UNDER THE EARTHFILL WHEN THE EXISTING GROUND ELEVATION IS AT +1.0 OR LESS, AND AS STAKED IN THE FIELD BY THE COTR. SEE CONSTRUCTION SPECIFICATION 95 FOR APPROXIMATE LOCATIONS OF GEOTEXTILE.

NOTE:
GEOTEXTILE WILL BE USED UNDER ALL THE ROCK RIPRAP. SEE CONSTRUCTION SPECIFICATION 95 FOR APPROXIMATE LOCATIONS OF GEOTEXTILE.

CONSTRUCTION LIMITS	
Construction Width	Construction Length
300'	17763'
ESTIMATED QUANTITIES	
Geotextile	38400 SY
Rockfill	160 Tons

NOTE:
SEE CONSTRUCTION SPECIFICATION 61 FOR APPROXIMATE LOCATIONS OF ROCK RIPRAP

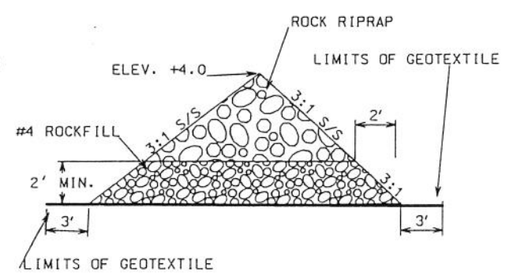

DETAIL A

NOTE:
SEE CONSTRUCTION SPECIFICATION 25 FOR APPROXIMATE LOCATIONS OF ROCKFILL

STATE OF LOUISIANA
E. J. GIERING III
No. 24033
REGISTERED PROFESSIONAL ENGINEER IN CIVIL ENGINEERING

Dat
Approved by
Date 11/97
Title 11/97
Title 01/99
Designed C. E. LaFleur
Drawn A. J. Gremillion
Traced
Checked James N. Moore

TYPICALS SECTIONS
CONSTRUCTION UNIT NO. 1
BRADY CANAL HYD. REST. - PTE-26B
TERREBONNE PARISH, LOUISIANA

U.S. DEPARTMENT OF AGRICULTURE - NATURAL RESOURCES CONSERVATION SERVICE

DATE	APPR.	REVISIONS	TITLE

CAD FILE NO. LA-231
DRAWING NO. TYPICALS
SHEET NO 1.0 OF 1.0

c:\fdrawdis.231\typicals.dgn Feb 14 1999 16:39:10