LOUISIANA DEPARTMENT OF NATURAL RESOURCES
MANDALAY BANK PROTECTION DEMO PROJECT (TE-41)
TERREBONNE PARISH, LOUISIANA

FEDERAL PROJECT NO. XTE-Demo
STATE PROJECT NO. TE-41
CEEC PROJECT NO. 1768

"AS-BUILTS"

LOUISIANA DEPARTMENT OF NATURAL RESOURCES
COASTAL RESTORATION AND MANAGEMENT

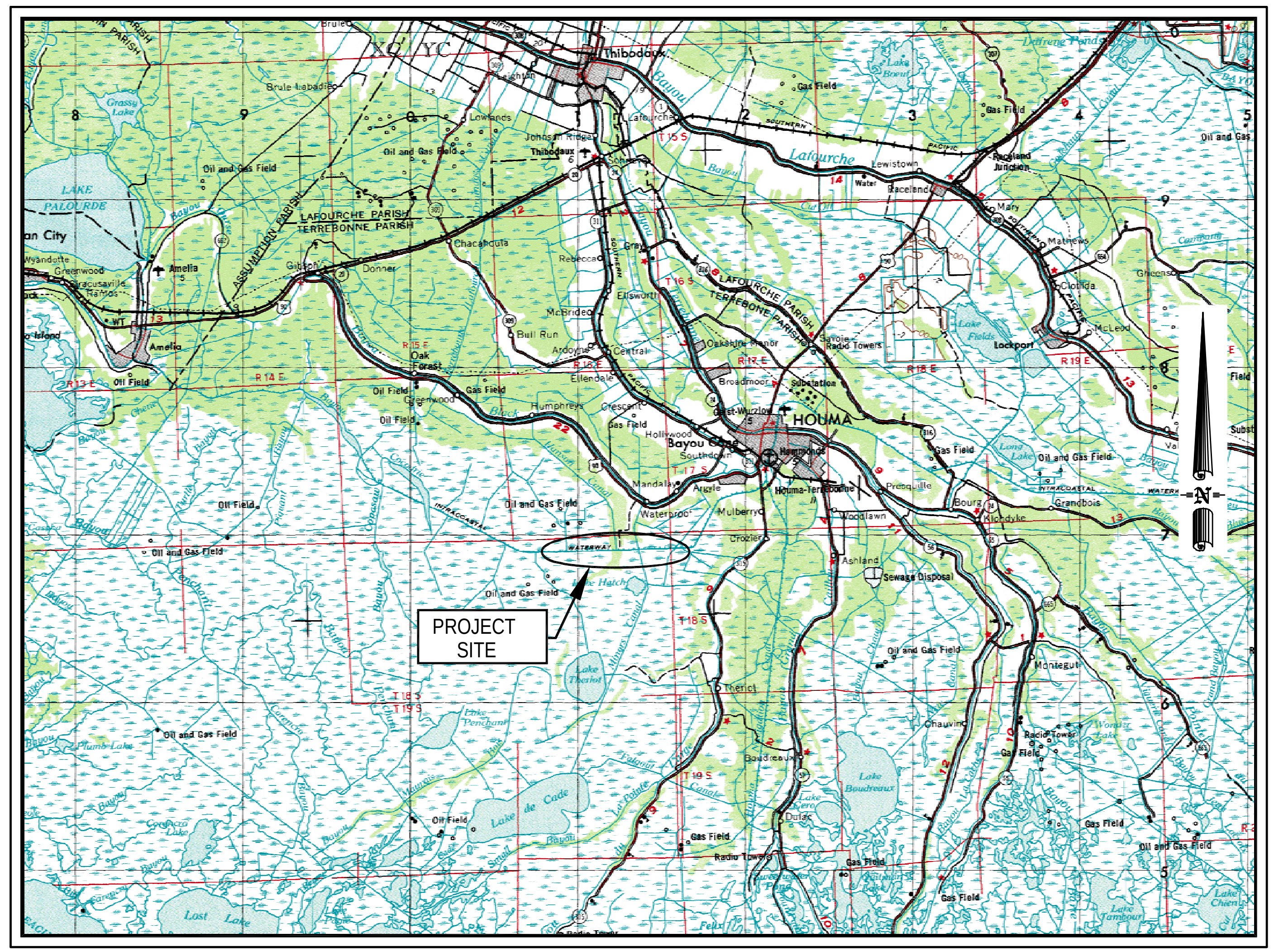

VICINITY MAP

N.T.S.

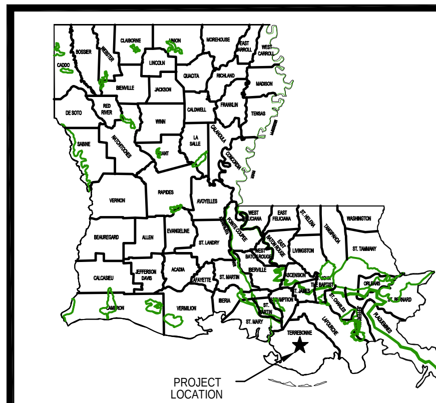

STATE OF LOUISIANA
INSET MAP

COASTAL
ENGINEERING AND
ENVIRONMENTAL
CONSULTANTS, INC.

Engineering - Scientists - Planners - Environmental Consultanting

Approved: ______________________ Date: __________
JEFFERY M. PENA, P.E.

"AS-BUILTS"

DRAWING INDEX

SHEET NUMBER	DESCRIPTION
	GENERAL
1	TITLE PAGE
1A	DRAWING INDEX
1B	GENERAL NOTES & ABBREVIATIONS
2	SUMMARY OF ESTIMATED QUANTITIES
	TYPICAL SECTION & DETAILS OF TREATMENTS
3	TREATMENT STRUCTURES LAYOUT
4	REVETMENT MATS TYPICAL SECTIONS
5	REVETMENT MATS, SETTLEMENT PLATE & ELEVATED SHORELINE SYSTEM TYPICAL DETAILS & SECTIONS
6	REVETMENT MATS & ARMORED PLUG TYPICAL PLANS
7	STRAIGHT WALLED FIBERGLASS SHEET PILE TYPICAL DETAILS & SECTION
8	DOUBLE SINUSOIDAL VINYL SHEET PILE TYPICAL DETAILS & SECTION
9	24" CONCRETE ARMOR UNITS & PLANTINGS TYPICAL DETAIL & SECTION
10	FENCING & PLANTING TYPICAL DETAIL & SECTION
11	ARMORED PLUG STRUCTURE TYPICAL SECTION
12	MISCELLANEOUS DETAILS
	REVETMENT MAT TREATMENTS
13	REVETMENT MAT BLOWOUT TREATMENT STRUCTURE NO. 1 (R1)
14	REVETMENT MAT BLOWOUT TREATMENT STRUCTURE NO. 2 (R2)
15	REVETMENT MAT BLOWOUT TREATMENT STRUCTURE NO. 3 (R3)
	FIBERGLASS SHEETPILE TREATMENTS
16	STRAIGHT WALLED FIBERGLASS SHEET PILE SYSTEM BLOWOUT TREATMENT STRUCTURE NO. 1 (V1)
17	STRAIGHT WALLED FIBERGLASS SHEET PILE SYSTEM BLOWOUT TREATMENT STRUCTURE NO. 2 (V2)
18	STRAIGHT WALLED FIBERGLASS SHEET PILE SYSTEM BLOWOUT TREATMENT STRUCTURE NO. 3 (V3)

SHEET NUMBER	DESCRIPTION
	CONCRETE ARMOR UNITS TREATMENTS
19	CONCRETE ARMOR UNITS W/ GIANT CUTGRASS OFF-BANK TREATMENT NO. 1 (J1)
20	CONCRETE ARMOR UNITS W/ GIANT CUTGRASS OFF-BANK TREATMENT NO. 2 (J2)
21	CONCRETE ARMOR UNITS W/ GIANT CUTGRASS OFF-BANK TREATMENT NO. 3 (J3)
	FENCING TREATMENTS
22	FENCING W/ GIANT CUTGRASS OFF-BANK TREATMENT NO. 1 (F1)
23	FENCING W/ GIANT CUTGRASS OFF-BANK TREATMENT NO. 2 (F2)
24	FENCING W/ GIANT CUTGRASS OFF-BANK TREATMENT NO. 3 (F3)
	ARMOR PLUGS
25	ARMORED PLUG STRUCTURE NO. 1 (A1)
26	ARMORED PLUG STRUCTURE NO. 2 (A2)
27	ARMORED PLUG STRUCTURE NO. 3 (A3)
	CONTROL SITES
28	CONTROL SITE NO. 1 (C1)
29	CONTROL SITE NO. 2 (C2)
30	CONTROL SITE NO. 3 (C3)
31	CONTROL SITE NO. 4 (C4)
	BORROW AREAS
32	BORROW AREAS PLAN & SECTIONS
	FLOATATION CANALS
33	TYPICAL FLOATATION CANAL PLAN & SECTION

MARK	DESCRIPTION	DATE	APPR.	MARK	DESCRIPTION	DATE	APPR.
1	"AS-BUILTS"	2/5/04	J.M.P.				

MAIN PROJECT LOCATION:
TERREBONNE PARISH
VICINITY OF DULAC
HOUMA, LA 70360

ARCADIS
ARCADIS GEIGER
4950 POYDRAS BLVD.
NEW ORLEANS, LA. 70115

DESIGNED BY: D.C.S.
CHECKED BY: J.M.P.
DRAWN BY: R.V.D.
DATE: NOV. 2001

PLOT SCALE: N.T.S.
PLOT DATE: 3/5/04
DESIGN FILE NAME: 1B01-01A.DWG
SUBMITTED BY: "AS-BUILTS"
SOLICITATION NO.:

WETLANDS RESTORATION TEAM, LA.
PHONE: (504) 862-2505
FAX: (504) 862-2511

LOUISIANA DEPARTMENT OF NATURAL RESOURCES
FEDERAL PROJECT NO. PE-Demo
STATE PROJECT NO. TE-44
MANDALAY BANK PROTECTION DEMO PROJECT
TERREBONNE PARISH, LOUISIANA

DRAWING INDEX

SHEET NUMBER
1A

DWG. 1 OF 1

GENERAL NOTES

1. CONTRACTOR SHALL FIELD VERIFY ALL DIMENSIONS, EXISTING ELEVATIONS AND CONDITIONS SHOWN ON THE PLANS PRIOR TO ORDERING MATERIAL, COMMENCEMENT OF CONSTRUCTION, AND PREPARATION OF SHOP DRAWINGS. ENGINEER SHALL BE NOTIFIED OF ALL DISCREPANCIES.
2. THE CONTRACTOR SHALL DESIGN AND PROVIDE FOR ANY REQUIRED EXCAVATIONS AS SHOWN ON THE DRAWINGS AND INDICATED IN THE SPECIFICATIONS.
3. VERTICAL CONTROL: N.A.V.D. 88' DATUM
4. HORIZONTAL CONTROL: LOUISIANA STATE PLANE COORDINATE SYSTEM SOUTH ZONE NAD 83
5. DIMENSIONS AND/OR ELEVATIONS MARKED THUS (±) ARE APPROXIMATE. CONTRACTOR SHALL VERIFY ACTUAL DIMENSIONS IN THE FIELD WITH THE PROJECT REPRESENTATIVE.
6. DETAILS MARKED (N.T.S.) ARE NOT SHOWN TO SCALE.
7. BENCHMARKS HAVE BEEN ESTABLISHED AT THE SITE BY THE OWNER. SEE SHEET 3 FOR BENCHMARK DESCRIPTION. THE CONTRACTOR SHALL BE RESPONSIBLE TO ESTABLISH AND MAINTAIN TEMPORARY BENCHMARKS DURING CONSTRUCTION AS NEEDED.
8. LOCATION OF UTILITIES INDICATED ON THE PLAN SHEET ARE FOR INFORMATIONAL PURPOSES ONLY AND ARE BASED IN PART ON INFORMATION PROVIDED BY THE RESPECTIVE UTILITY COMPANIES. IT IS THE CONTRACTOR'S RESPONSIBILITY TO VERIFY ALL EXISTING UTILITY LOCATIONS PRIOR TO CONSTRUCTION.
9. THE CONTRACTOR IS RESPONSIBLE FOR ANY DAMAGE TO EXISTING UTILITIES CAUSED BY THE CONTRACTOR'S NEGLIGENCE. THE DAMAGE SHALL BE REPAIRED AT CONTRACTOR'S EXPENSE.
10. CONTRACTOR SHALL VISIT THE SITE OF WORK AND COMPLETELY INFORM HIMSELF RELATIVE TO CONSTRUCTION.
11. THE CONTRACTOR SHALL MAKE HIS OWN INTERPRETATION OF THE CHARACTER AND CONDITION OF THE MATERIALS WHICH WILL BE ENCOUNTERED BETWEEN THE BORINGS LOCATION. THE CONTRACTOR, AT HIS OWN EXPENSE, MAY MAKE ADDITIONAL SURVEYS AND INVESTIGATIONS AS HE DEEMS NECESSARY TO DETERMINE CONDITIONS WHICH WILL AFFECT PERFORMANCE OF THE WORK.
12. ALL STRUCTURAL STEEL SHALL BE ASTM A-36, UNLESS OTHERWISE NOTED.
13. ALL WELDING SHALL BE ELECTRIC WELDING. WORKMANSHIP AND TECHNIQUE, WHERE APPLICABLE, SHALL CONFORM TO THE AMERICAN WELDING SOCIETY STRUCTURAL WELDING CODE.
14. WELDING SYMBOLS SHOWN ARE THOSE ADOPTED BY THE AMERICAN WELDING SOCIETY AND INDICATE ONLY SIZE AND TYPE OF WELDS REQUIRED. DETAILED INFORMATION SHALL BE SHOWN ON THE SHOP DRAWINGS AND SUBMITTED BY THE CONTRACTOR FOR APPROVAL.
15. STRUCTURAL STEEL FABRICATION AND ERECTION SHALL CONFORM TO THE A.I.S.C. MANUAL OF STEEL CONSTRUCTION LATEST EDITION. UNLESS NOTED OTHERWISE.
16. THE SETTLEMENT PLATES SHALL BE HOT DIPPED GALVANIZED AFTER FABRICATION.
17. CONCRETE REVETMENT MATS SHALL HAVE A MINIMUM CONCRETE COMPRESSIVE STRENGTH OF 4,000 PSI.

ABBREVIATION

APPROX.	-	APPROXIMATE
AVG.	-	AVERAGE
℄	-	CENTER LINE
DIA.	-	DIAMETER
EL. OR ELEV.	-	ELEVATION
GALV.	-	GALVANIZED
G.I.W.W.	-	GULF INTRACOASTAL WATERWAY
MIN.	-	MINIMUM
MHW	-	MEAN HIGH WATER
MLW	-	MEAN LOW WATER
N.T.S.	-	NOT TO SCALE
TYP.	-	TYPICAL
CPE	-	CORRUGATED POLYETHYLENE

"AS-BUILTS"

LEGEND

- EXISTING GROUND
- MARSH
- SPOIL
- TREES
- 0.0 — ELEVATION @ CENTER OF TEXT
- 1.8 — HIGH BANK ELEV.
- 0.8 — BANK BOTTOM ELEV.
- WARNING SIGN
- DOUBLE ROW 24" CONCRETE ARMOR UNIT
- GIANT CUTGRASS
- FENCING

UTILITY NOTE:

PRIOR TO ANY EXCAVATION, THE CONTRACTOR SHALL CALL LOUISIANA ONE CALL (DOTTIE) AT 1-800-272-3020 TO LOCATE ANY UTILITY LINES IN THE AREA WHICH THE OWNER DOES NOT KNOW ABOUT. ADDITIONALLY, THE CONTRACTOR SHALL PERFORM A MAGNETOMETER SURVEY ALONG THE SOUTH SHORELINE OF THE GULF INTRACOASTAL WATER WAY WHERE THE TREATMENTS ARE TO BE LOCATED. FURTHERMORE, CONTRACTOR SHALL NOTIFY MANDALAY OIL CO. A MINIMUM OF 14 DAYS PRIOR TO ACCESSING THE SITE AT (337) 232-7669, ATTENTION MS. DEBBIE BUSHNELL TO HAVE THE PIPELINE IN THE PROJECT AREA PROPERLY MARKED PRIOR TO MOBILIZATION. MANDALAY OIL CO. ALSO REQUIRES THAT ONE OF THEIR REPRESENTATIVES BE PRESENT FOR ANY CONSTRUCTION ACTIVITIES UNDERTAKEN WITHIN 300 FT. OF THEIR PIPELINE.

(AS-BUILTS) BENCHMARK MONUMENTATION

DESIGNATION	DESCRIPTION	ELEVATION (NAVD 88')	LOCATION (NAD 83)
MAND (TE41-SM-01)	MONUMENT BY MORRIS P. HEBERT, INC. , SET IN TERREBONNE PARISH. SEE SHEET 3	~~2.012'~~ 1.803'	X= 3,451,061.842 Y= 377,991.375

MARK	DESCRIPTION	DATE	APPR.
1	"AS-BUILTS"	2.5./04	J.M.P.

MAIN OFFICE LOCATION: 107 EVANGELINE STREET KENNER, LA. 70065

DESIGNED BY: D.C.S. CHECKED BY: J.M.P. DRAWN BY: A.M.S. DATE: NOV. 2002

PLOT SCALE: N.T.S. PLOT DATE: 2/17/04 SUBMITTED BY: DESIGN FILE NAME: 1786-01B.DWG SOLICITATION NO.

LOUISIANA DEPARTMENT OF NATURAL RESOURCES
FEDERAL PROJECT NO. XTE-Demo
TE41-PROJECT NO. TE-41
MANDALAY BANK PROTECTION DEMO PROJECT
TERREBONNE PARISH, LOUISIANA

GENERAL NOTES & ABBREVIATIONS

SHEET NUMBER 1B

DWG. 1 OF 1

"AS-BUILTS"

SUMMARY OF ESTIMATED QUANTITIES

BASE BID

ITEM NO.	DESCRIPTION	UNIT	QUANTITY	ACTUAL
1	Mobilization & Demobilization	Lump Sum	~~1~~	1
2	Clearing & Grubbing (As Directed by Engineer)	Lump Sum	~~1~~	1
3	Supply & Install Concrete Revetment Mats	Each	~~220~~	255
4	Supply & Install Elevated Shoreline System (Perforated CPE Pipe System)	Linear Feet	~~1,080~~	1.129
5	Supply & Install Anchors (Type I)	Each	~~348~~	364
6	Dredge Material (Armor Plug & Straight Walled Fiberglass Sheet Pile System)	Cubic Yards	~~2,058~~	2,356
7	Supply & Install Fiberglass Sheet Pile	Square Feet	~~69,960~~	72,960
8	Supply & Install 24" Concrete Armor Units	Linear Feet	~~1,325~~	1,283
9	Supply & Install Geotextile Fabric	Square Yard	~~5,211~~	5,770
10	Supply & Install Giant Cutgrass	Each	~~908~~	908
11	Supply & Install Timber Fence	Linear Feet	~~1,910~~	1,910
12	Supply & Install Warning Signs	Each	~~15~~	15
13	Supply & Install Settlement Plates	Each	~~3~~	3
14	Supply & Install Anchors (Type II)	Each	~~206~~	206
15	Supply & Install Geogrid	Square Yard	~~4,168~~	4,002

~~ALTERNATE NO. 1 BID~~

~~16~~	~~Alternate No. 1 Bid Item Dredge Material, Item No. 6 to be replaced with: Dredge Material (Armor Plug & Double Sinusoidal Vinyl Sheet Pile System)~~	~~Cubic Yards~~	~~1,648~~
~~17~~	~~Alternate No. 1 Bid Item Vinyl Sheet Piling, Item No. 7 to be replaced with: Supply & Install Vinyl Sheet Pile~~	~~Square Feet~~	~~70,080~~

MARK	DESCRIPTION	DATE	APPR.	MARK	DESCRIPTION	DATE	APPR.
1	"AS-BUILTS"	2/5/04	J.M.P.				

MAIN OFFICE LOCATION:
107 ELEVATOR STREET
HOUMA, LA 70360

WITH OFFICES IN:
WESTWOOD AND BOSCH BOULEVARD, LA.
PHONE: (985) 868-0139
FAX: (985) 868-9972

DESIGNED BY:	D.C.S.	PLOT DATE:	26/04
CHECKED BY:	J.M.P.	PLOT SCALE:	N.T.S.
DRAWN BY:	R.L.G.	DESIGN FILE NAME:	1780-02.DWG
DATE:	NOV. 2001	SUBMITTED BY:	
		1780-02	SOLICITATION NO.

LOUISIANA DEPARTMENT OF NATURAL RESOURCES
FEDERAL PROJECT NO. TE-19-Demo
PARISH PROJECT NO. TE-19
MANDALAY BANK PROTECTION DEMO PROJECT
TERREBONNE PARISH, LOUISIANA

SUMMARY OF
ESTIMATED QUANTITIES

SHEET NUMBER
2

DWG. 1 OF 1

LEGEND

C#	INDICATES CONTROL SITES TO BE USED FOR MONITORING ONLY.
V#	INDICATES BLOW-OUT RESTORATION TREATMENT USING STRAIGHT-WALLED FIBERGLASS SHEETPILE SYSTEM.
F#	INDICATES OFF-BANK TREATMENT USING FENCING WITH GIANT CUTGRASS.
J#	INDICATES OFF-BANK TREATMENT USING 24" CONCRETE ARMOR UNITS WITH GIANT CUTGRASS.
A#	INDICATES ARMORED PLUG STRUCTURES.
R#	INDICATES BLOW-OUT RESTORATION TREATMENT USING CONCRETE REVETMENT MATS.

LOUISIANA DEPARTMENT OF NATURAL RESOURCES
FEDERAL PROJECT NO. TE-40
STATE PROJECT NO. TE41
MANDALAY BANK PROTECTION DEMO PROJECT
TERREBONNE PARISH, LOUISIANA

TREATMENT STRUCTURES LAYOUT

SHEET NUMBER 3

DWG. 1 OF 1

MARK	DESCRIPTION	DATE	BY
1	"AS-BUILTS"	2/7/05	L.A.S.

MINI CERES II
ASTI-ROSE ENTERPRISES, L.L.C.
4470 ROSE ROAD, HOUMA, LA. 70360
PHONE: (985) 868-2500
FAX: (504) 868-6413

MINI CERES II LOCATION
SOUTH BAYOU
HOUMA, LA. 70360

DESIGNED BY: D.C.S.	PLOT SCALE:	PLOT DATE:	DESIGN FILE NAME: 1780-ACD.DWG
CHECKED BY: J.A.P.			SUBMITTED BY:
DRAWN BY: P.A.P.	1"=400'	2/11/04	SCHEDULE NO.
DATE: NOV. 2001			

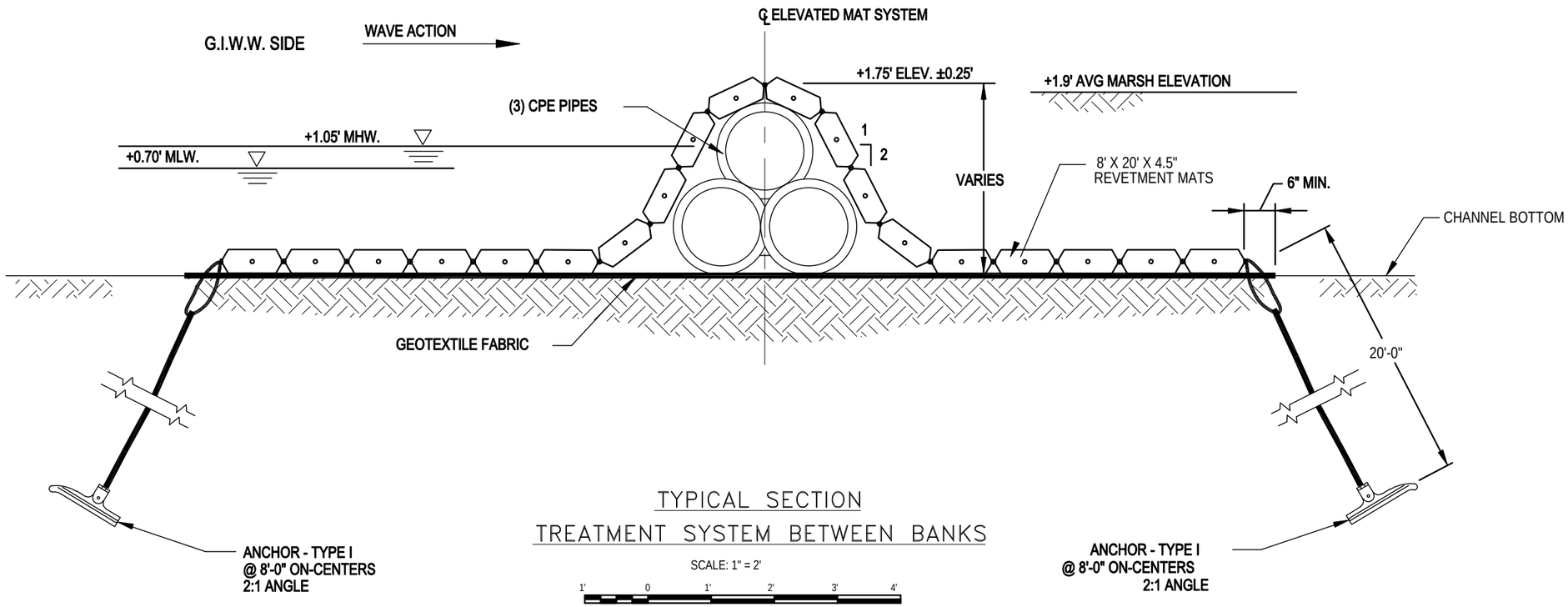

TYPICAL SECTION

TREATMENT SYSTEM BETWEEN BANKS

SCALE: 1" = 2'

1' 0 1' 2' 3' 4'

"AS-BUILTS"

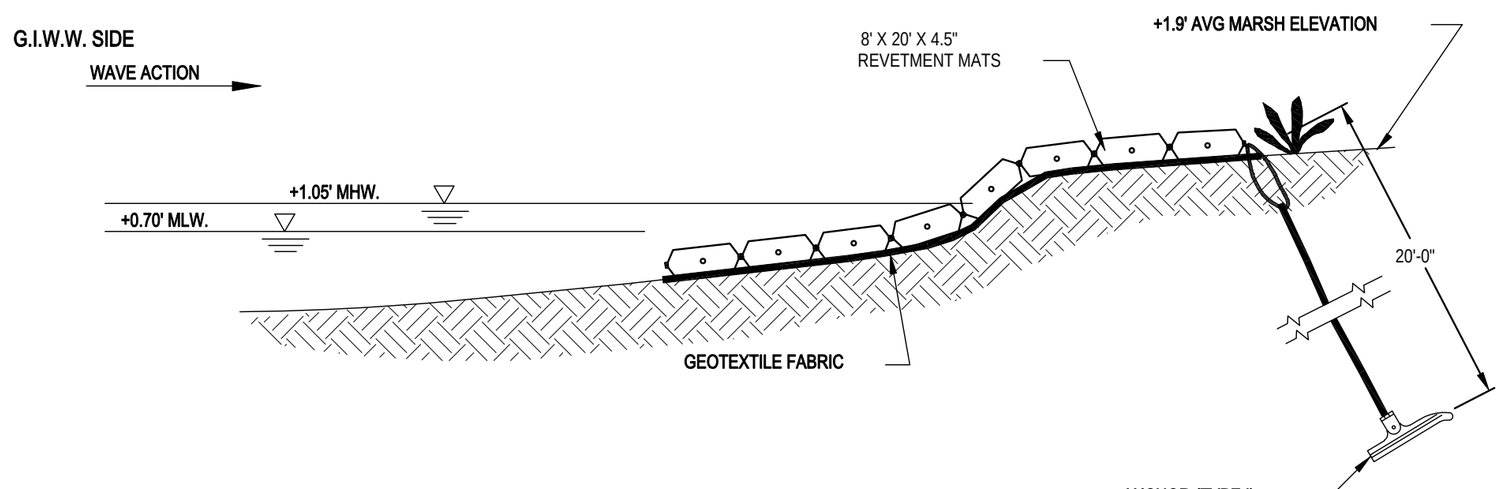

TYPICAL SECTION

TREATMENT SYSTEM TIE-IN TO BANKS

SCALE: 1" = 2'

1' 0 1' 2' 3' 4'

NOTES:

1) **CONSTRUCTION DRAWINGS ARE DEPICTED AT CONSTRUCTION ELEVATIONS.**
2) ALL ELEVATION ARE IN NAVD 88
3) EXCAVATION MAY BE REQUIRED TO OBTAIN REQ'D. ELEVATIONS IN PLACEMENT OF CPE PIPE BUNDLES.

MARK	DESCRIPTION	DATE	APPR.
1	"AS-BUILTS"	9/5/06	J.M.P.

MAIN OFFICE LOCATION:
DEPARTMENT OF NATURAL RESOURCES
OFFICE OF COASTAL RESTORATION
POST OFFICE BOX 94396
BATON ROUGE, LOUISIANA 70804-9396

WITH OFFICES IN:
NORTHWEST AND NEW ORLEANS, LA.
PHILADELPHIA, PA.
FTN. COLLINS, CO. & DENVER

DESIGNED BY:	D.C.S.	PLOT SCALE	1:2
CHECKED BY:	J.M.P.	PLOT DATE	26/04
SUBMITTED BY:	R.A.K.	DESIGN FILE NAME	2768-04.DWG
DATE	NOV. 2001	SUBMITTED BY:	SOLICITATION NO.

LOUISIANA DEPARTMENT OF NATURAL RESOURCES
FEDERAL AID PROJECT NO. F-78
STATE PROJECT NO. TE-41
MANDALAY BANK PROTECTION DEMO PROJECT
TERREBONNE PARISH, LOUISIANA

REVETMENT MATS
TYPICAL SECTIONS

SHEET NUMBER
4

DWG. 1 OF 1

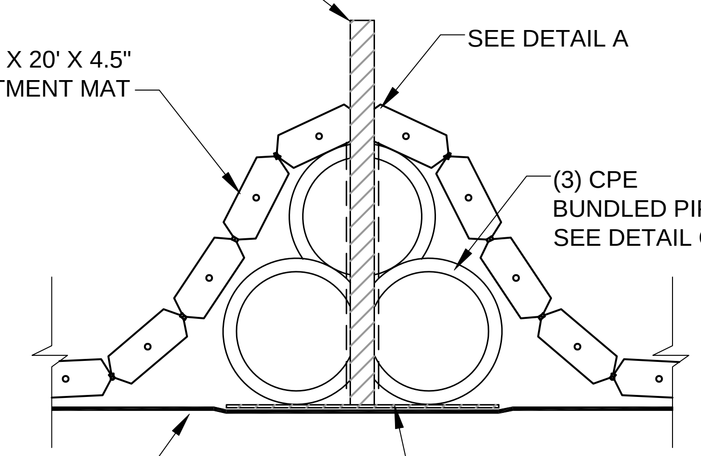

SETTLEMENT PLATE DETAIL

SCALE: 1" = 2'

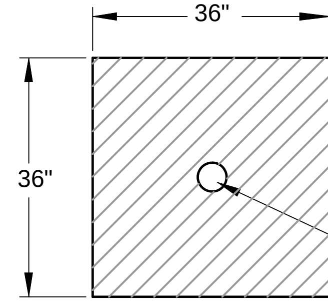

PLAN

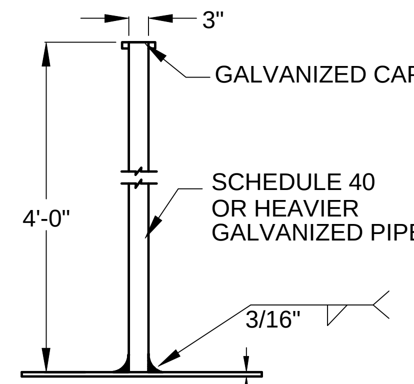

ELEVATION

DETAIL B – SETTLEMENT PLATE

SCALE: N.T.S.

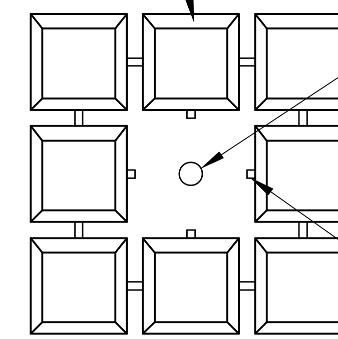

"AS-BUILTS"

DETAIL A

SCALE: N.T.S.

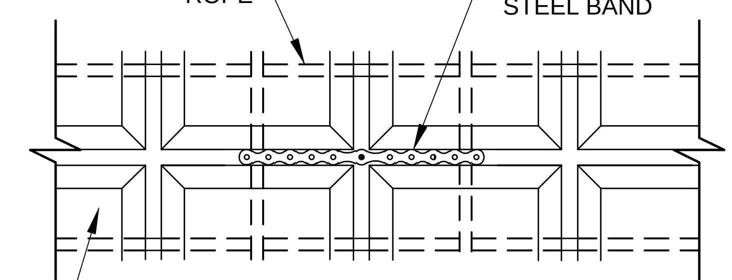

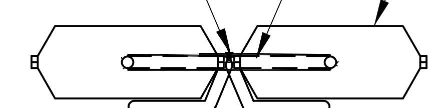

NOTE: STAINLESS STEEL BANDS SHALL CONNECT ADJACENT MATS.
STAINLESS STEEL BOLTS WITH LOCKNUTS WILL BE USED TO SECURE BANDS.
BANDING MATERIALS SHALL BE PROVIDED BY THE MAT MANUFACTURER.

STAINLESS STEEL STRAPPING DETAIL

SCALE: 1" = 1'

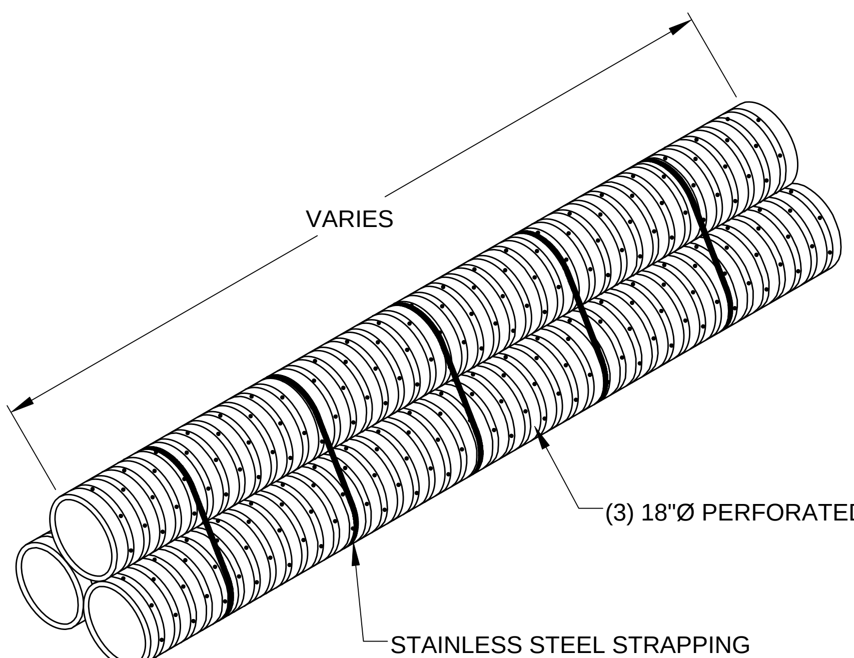

DETAIL C – ASSEMBLED PIPES

SCALE: N.T.S.

NOTES:

1. THE CONTRACTOR SHALL BE ALLOWED TO REMOVE ONE MAT ELEMENT FOR THE PLACEMENT OF THE REVETMENT MAT OVER THE SETTLEMENT PLATE. (SEE DETAIL "A")

2. ONE SETTLEMENT PLATE SHALL BE INSTALLED ALONG THE CENTERLINE OF THE REVETMENT MAT STRUCTURE AS SHOWN ON THE DRAWINGS OR AS DIRECTED BY THE PROJECT ENGINEER. APPROXIMATE LOCATIONS OF THE SETTLEMENT PLATES ARE SHOWN ON SHEETS 13, 14, & 15. ACTUAL LOCATIONS WILL BE DETERMINED IN THE FIELD. FOR INSTALLATION METHOD REFER TO THE PROJECT SPECIFICATIONS. SETTLEMENT PLATES SHALL BE HOT DIPPED GALVANIZED AFTER FABRICATION.

3. PIPE BUNDLES & MAT ENDS SHALL NOT END AT THE SAME LOCATION. MATS SHALL BE INSTALLED SO AS TO COVER THE AREAS WHERE PIPE BUNDLES MEET.

4. STAINLESS STEEL STRAPPING SHALL BE PLACED @ ENDS OF PIPES AND @ A MIN. OF 5' SPACING

5. PIPE JOINT LENGTH WILL BE AS AVAILABLE FROM MANUFACTURER.

MARK	DESCRIPTION	DATE	APPR.
1	"AS-BUILTS"	2/5/04	J.M.P.

MAIN OFFICE LOCATION:
197 ELYSIAN DRIVE
HOUMA, LA. 70360
WITH OFFICES IN
WESTWEGO AND BATON ROUGE, LA.
PHONE: (504) 868-3434
FAX: (504) 868-8513

DESIGNED BY: D.C.S.
CHECKED BY: J.M.P.
DRAWN BY: R.A.P.
DATE: NOV. 2001
PLOT SCALE: N.T.S.
PLOT DATE: 2/5/04
DESIGN FILE NAME: 1768-05.DWG
SUBMITTED BY: DESIGN ENGINEER
SOLICITATION NO.

LOUISIANA DEPARTMENT OF NATURAL RESOURCES
FEDERAL PROJECT NO. XTE-Demo
STATE PROJECT NO. TE-41
MANDALAY BANK PROTECTION DEMO PROJECT
TERREBONNE PARISH, LOUISIANA

REVETMENT MATS, SETTLEMENT PLATE & ELEVATED SHORELINE SYSTEM TYPICAL DETAILS & SECTIONS

SHEET NUMBER 5
DWG. 1 OF 1

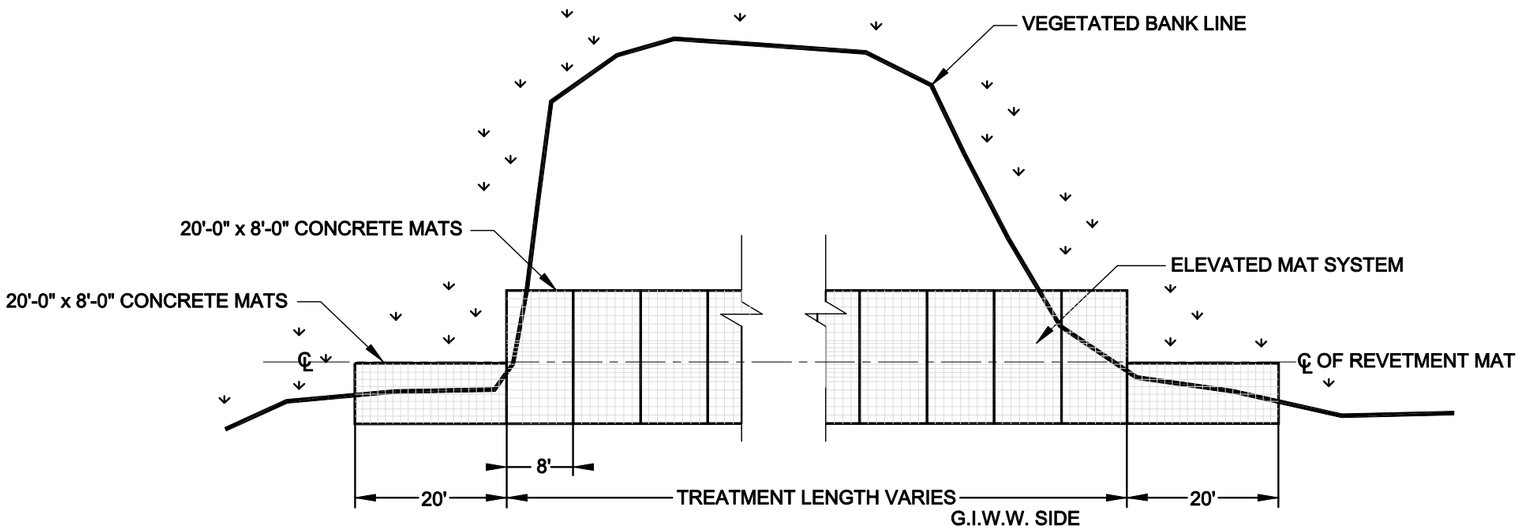

REVETMENT MAT
TYPICAL PLAN

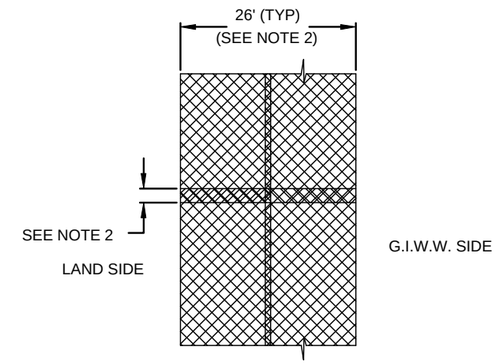

WOVEN GEOTEXTILE LAYOUT
SCALE: N.T.S.

NOTES:

1. THE CONSTRUCTION OF THE BLOWOUT TREATMENTS CONSISTS OF WOVEN GEOTEXTILE FABRIC UNDER CONCRETE REVETMENT MATS (SEE SHEETS 13,14,15,25,26 & 27). GEOTEXTILES SHALL BE AS PER THE TECHNICAL SPECIFICATIONS. CONTRACTOR SHALL PLACE GEOTEXTILES IN ACCORDANCE WITH THE TECHNICAL SPECIFICATIONS AND AS SHOWN ON THE CONSTRUCTION DRAWINGS.
2. ANY SEAM PARALLEL TO BLOWOUT TREATMENT CENTERLINE SHALL BE SEWN. THE MINIMUM OVERLAP AT THE ROLL ENDS, PERPENDICULAR TO BREAKWATER CENTERLINE, SHALL BE THREE FEET FOR WOVEN GEOTEXTILES. THE TYPICAL GEOTEXTILE WIDTH INCLUDES A 1' MINIMUM OVERLAP ON EACH SIDE OF THE BREAKWATER.

"AS-BUILTS"

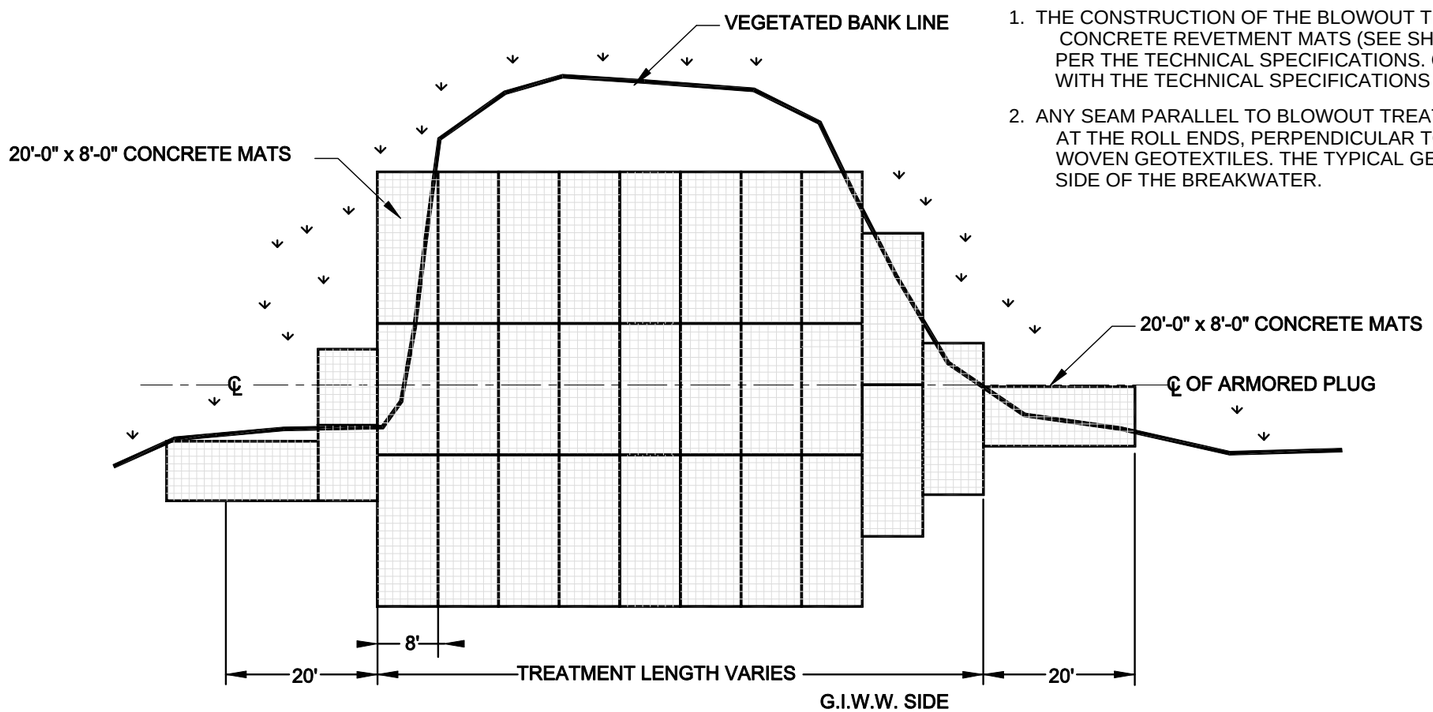

ARMORED PLUG
TYPICAL PLAN

NOTE:
ALL ELEVATIONS ARE IN NAVD 88

SCALE: 1" = 20'
10' 0 10' 20' 30' 40'

LOUISIANA DEPARTMENT OF NATURAL RESOURCES
FEDERAL PROJECT NO. CWP-2000
STATE PROJECT NO. TE-41
MANDALAY BANK PROTECTION DEMO PROJECT
TERREBONNE PARISH, LOUISIANA

REVETMENT MATS & ARMORED PLUG TYPICAL PLANS

SHEET NUMBER 6
DWG. 1 OF 1

MARK	DESCRIPTION	DATE	APPR.
1	"AS-BUILTS"	9/9/04	F.M.P.

MAIN OFFICE LOCATION:
1201 EVANS DRIVE
HOUMA, LA 70360

WITH OFFICES IN:
WESTWEGO AND METAIRIE, LA.
PHONE: (504) 436-6400
FAX: (504) 436-6415

DESIGN FILE NAME: 1788-06.DWG
SUBMITTED BY: 09/09/2004
PLOT DATE: 11/29/01
PLOT SCALE: N.T.S.
DESIGNED BY: D.C.S.
CHECKED BY: J.A.P.
DRAWN BY: A.A.P.
DATE: NOV. 2001

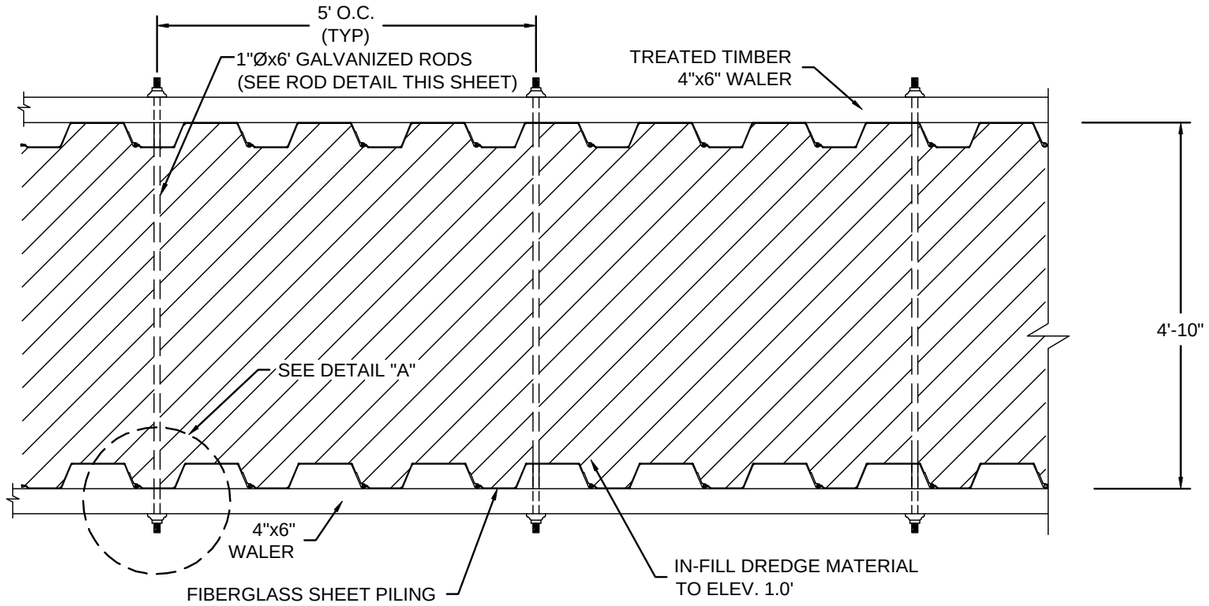

PLAN OF TYPICAL MODULE
PARALLEL FIBERGLASS SHEET PILING

SCALE: 1" = 2'

1' 0 1' 2' 3' 4'

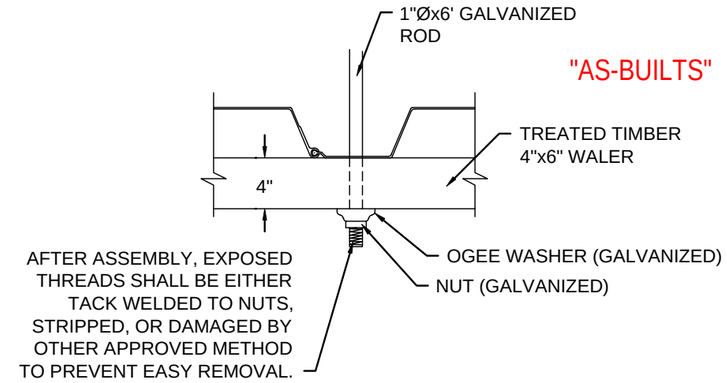

DETAIL A
TYP. BOTH SIDES

SCALE: N.T.S.

DETAIL ROD
SCALE: 1" = 2'

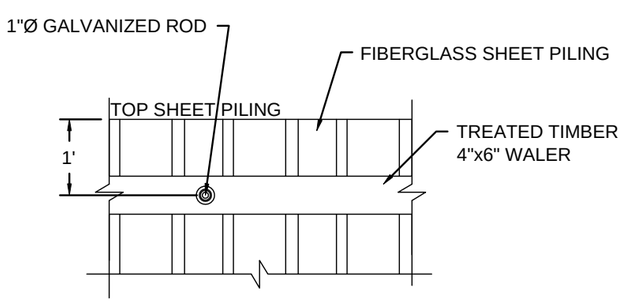

FRONT VIEW
SCALE: 1" = 2'

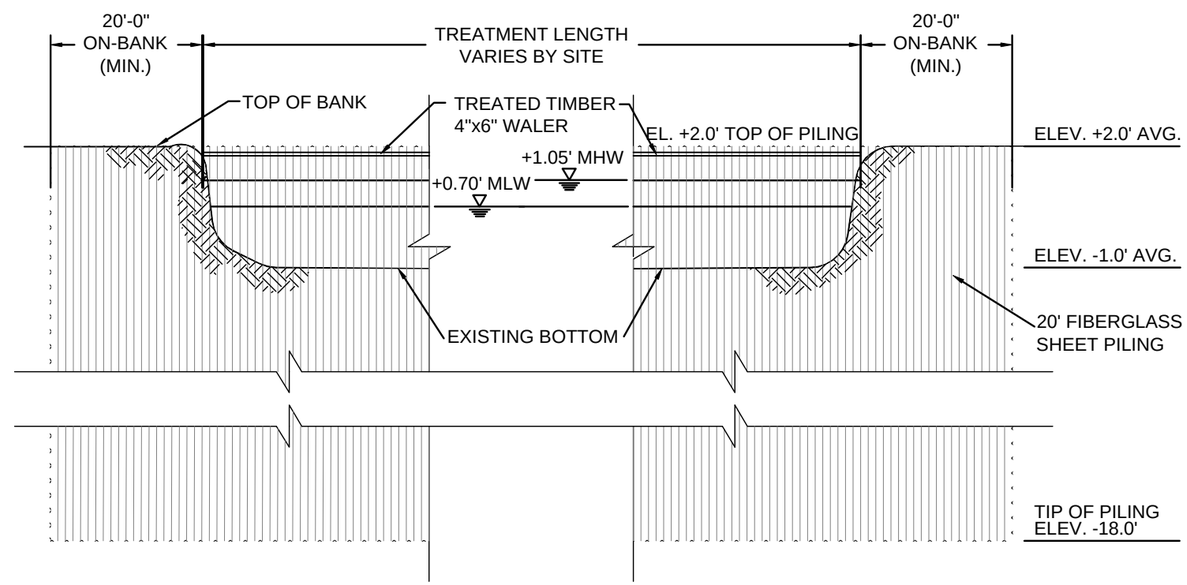

TYPICAL ELEVATION

VERTICAL SCALE: 1" = 5'

2.5' 0 2.5' 5' 7.5' 10'

HORIZONTAL SCALE: 1" = 20'

10' 0 10' 20' 30' 40'

NOTE:

ALL ELEVATIONS ARE IN NAVD 88

DESIGNED BY:	D.C.S.
CHECKED BY:	J.A.P.
CHECKED BY:	A.K.J.
DATE:	NOV. 2001
PLOT SCALE:	N.T.S.
PLOT DATE:	11/19/01
DESIGN FILE NAME:	1798-07.DWG
SUBMITTED BY:	d:\pcs\c-c\c-p\c\s - - -
SOLICITATION NO.	- - -

MAIN OFFICE LOCATION:
107 EVANS ROAD
HOUMA, LA 70360

VISITING OFFICES IN:
WEST MONROE AND ALTON, ROUGE, LA.
PHONE: (504) 868-6376
FAX: (504) 868-6015

LOUISIANA DEPARTMENT OF NATURAL RESOURCES
FEDERAL PROJECT NO. 1798-07-01
STATE PROJECT NO. TE-41

MANDALAY BANK PROTECTION DEMO PROJECT
TERREBONNE PARISH, LOUISIANA

STRAIGHT WALLED FIBERGLASS SHEET PILE
TYPICAL DETAILS & SECTION

SHEET NUMBER
7

DWG. 1 OF 1

MARK	DESCRIPTION	DATE	APP'D
1	"AS-BUILTS"	9/20/06	J.A.P.

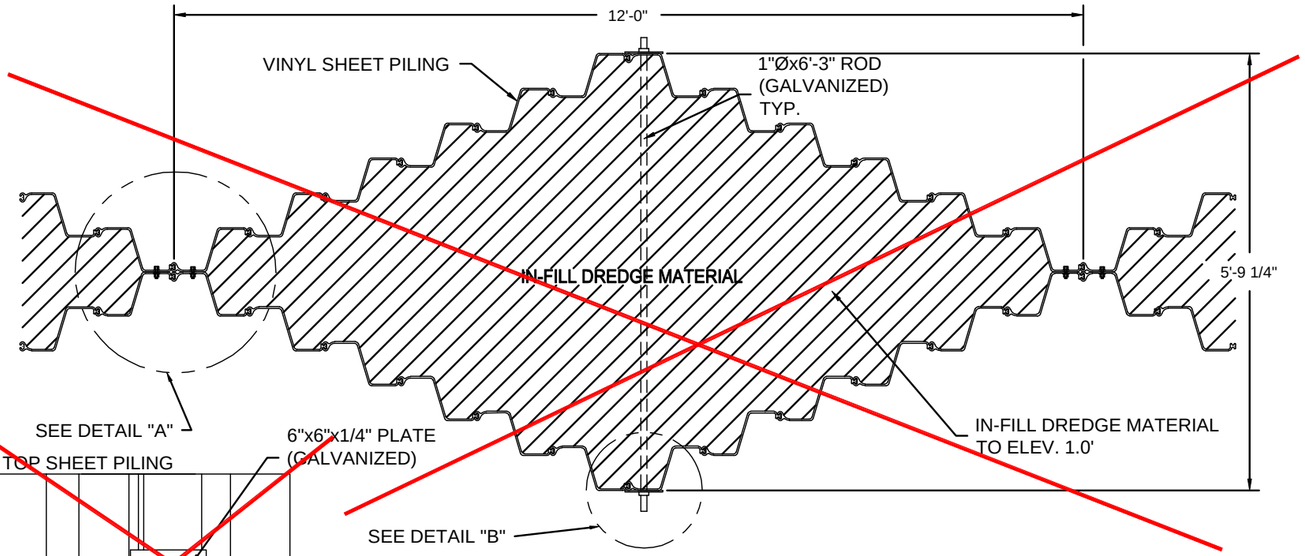

PLAN OF TYPICAL MODULE
DOUBLE SINUSOIDAL VINYL SHEET PILING

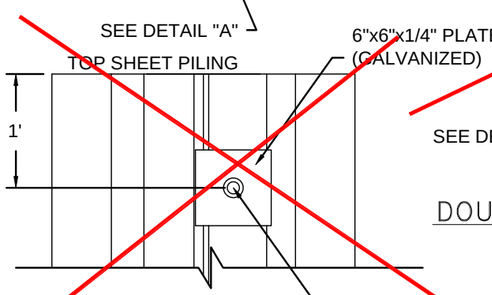

FRONT
SCALE: N.T.S.

SCALE: 1" = 2'

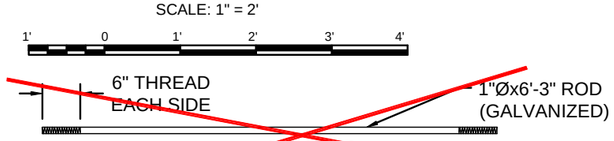

DETAIL ROD
SCALE: 1" = 2'

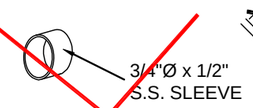

SLEEVE DETAIL
SCALE: N.T.S.

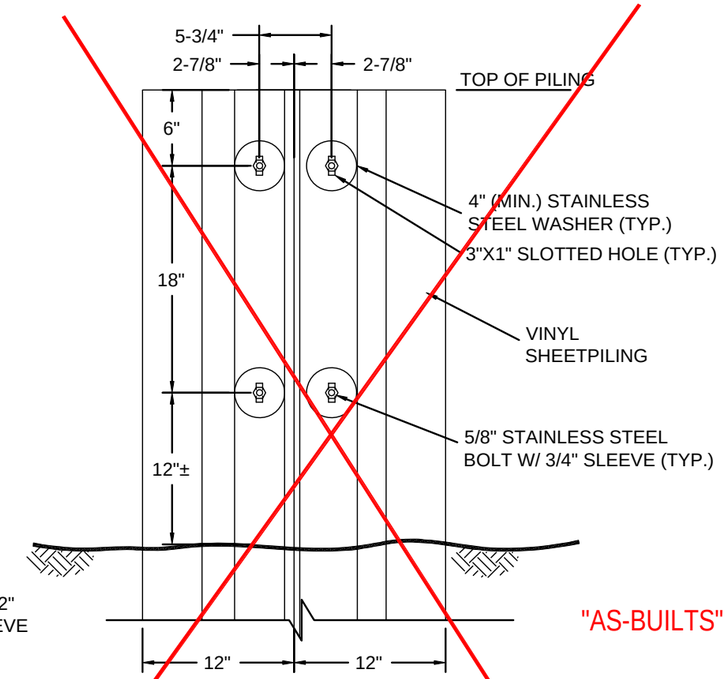

"AS-BUILTS"

DETAIL "A" PROFILE
SCALE: N.T.S.

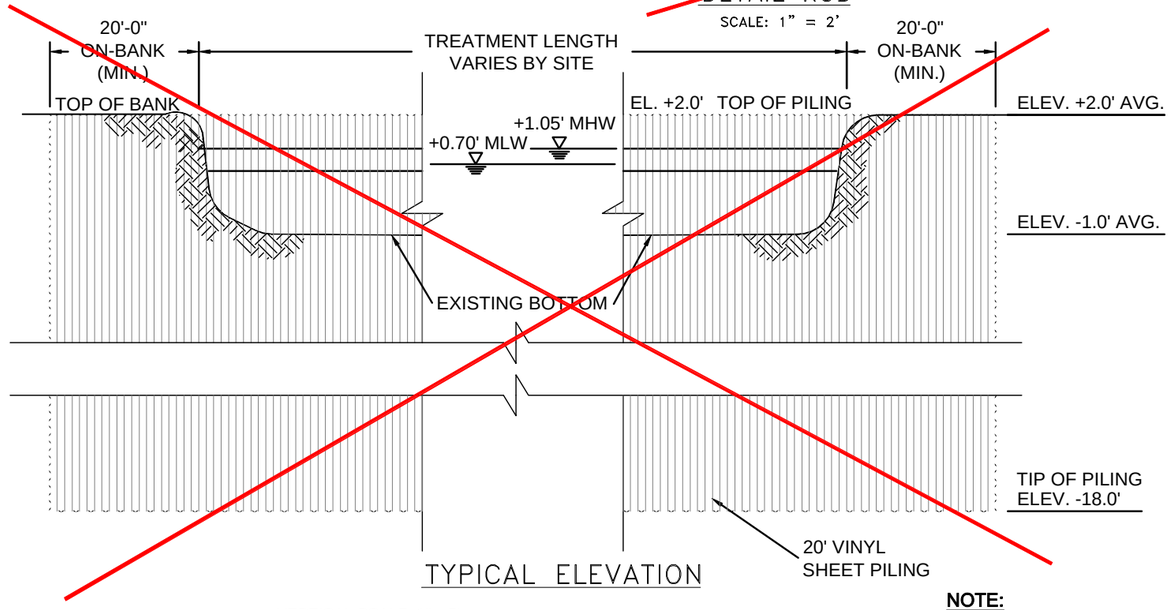

TYPICAL ELEVATION

VERTICAL SCALE: 1" = 5'

HORIZONTAL SCALE: 1" = 20'

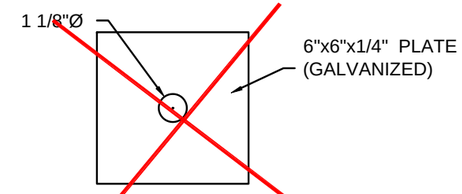

DETAIL PLATE
SCALE: N.T.S.

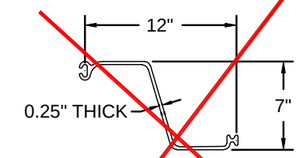

VINYL SHEET PILE SECTION
SCALE: N.T.S.

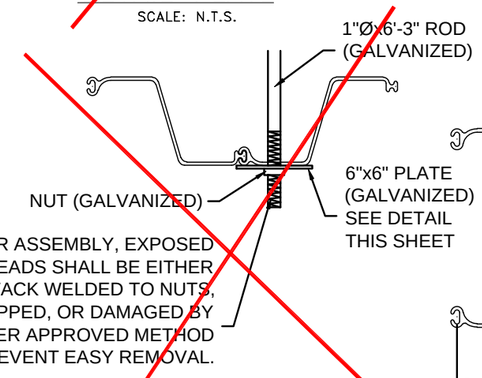

DETAIL "B"
SCALE: N.T.S.

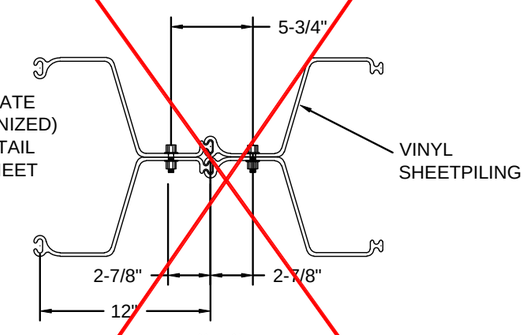

DETAIL "A" PLAN
SCALE: N.T.S.

NOTE:
ALL ELEVATIONS ARE IN NAVD 88

MARK	DESCRIPTION	DATE	APP'D
1	"AS-BUILTS"	9/5/06	J.M.P.

WITH OFFICES IN:
WESTWOOD AND BATON ROUGE, LA.
PHONE: (504) 436-6400
FAX: (504) 436-6415

MAIN OFFICE LOCATION:
107 EDGEWOOD DRIVE
HOUMA, LA. 70360

DESIGN FILE NAME:	2780-08.DWG
SUBMITTED BY:	SOUCY/CAYON NO.
PLOT DATE:	11/20/03
PLOT SCALE:	N.T.S.
DESIGNED BY:	D.C.S.
CHECKED BY:	J.M.P.
DRAWN BY:	M.A.P.
DATE:	NOV. 2003

LOUISIANA DEPARTMENT OF NATURAL RESOURCES
FEDERAL GRANT NO. F06AP00000
STATE PROJECT NO. TE-41
MANDALAY BANK PROTECTION DEMO PROJECT
TERREBONNE PARISH, LOUISIANA

DOUBLE SINUSOIDAL VINYL SHEET
PILE TYPICAL DETAILS & SECTION

SHEET
NUMBER
8

DWG. 1 OF 1

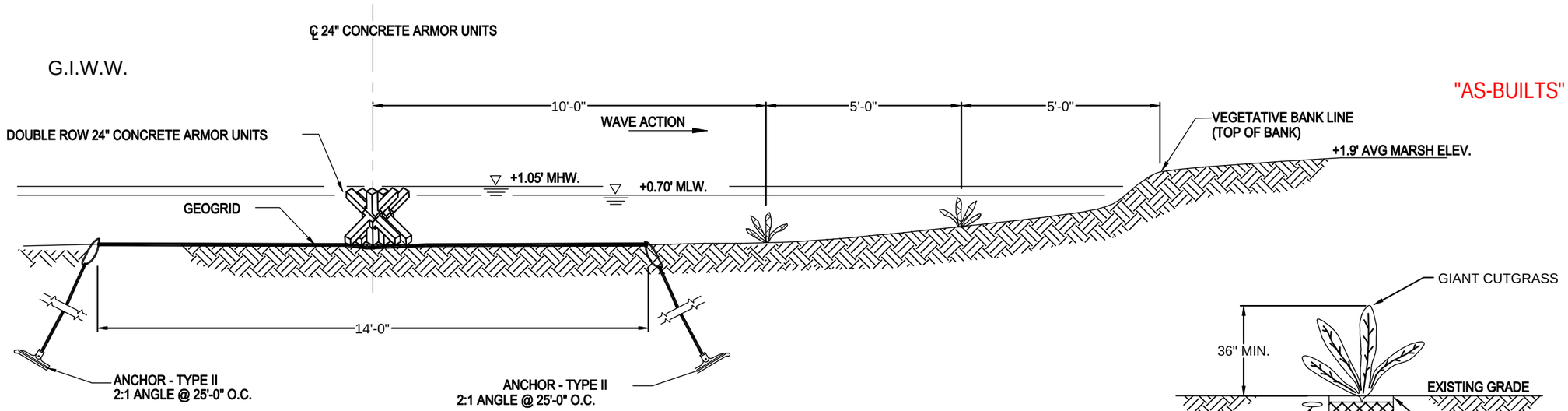

TYPICAL SECTION
TREATMENT SYSTEM TIE-IN TO BANKS

SCALE: 1" = 3'

1.5' 0 1.5' 3' 4.5' 6'

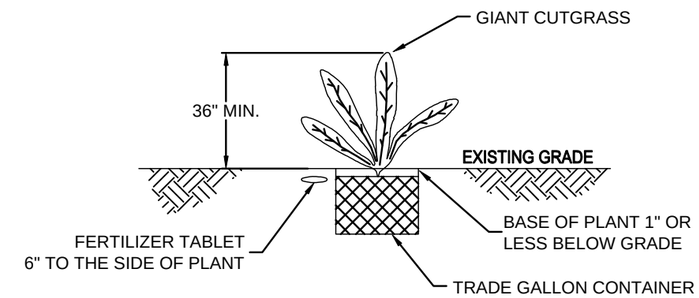

TYPICAL PLANTING DETAIL

SCALE: N.T.S.

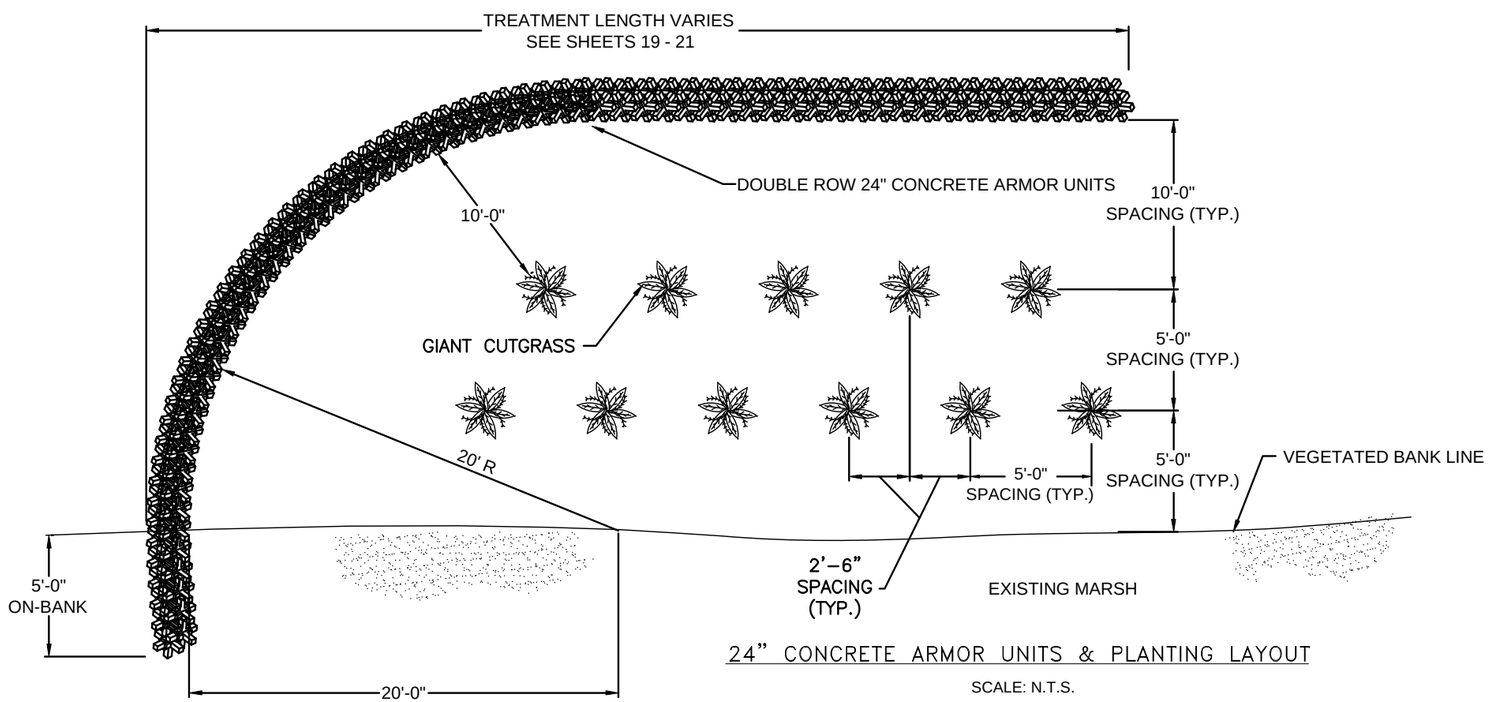

24" CONCRETE ARMOR UNITS & PLANTING LAYOUT

SCALE: N.T.S.

NOTES:

1. PLANTING TO BE (2) ROWS DEEP STAGGERED ROWS AS SHOWN.
2. EXACT LOCATION OF ALL PLANT ROWS WILL BE DETERMINED ON SITE BY DNR/CRD AND/OR ITS INSPECTOR.
3. ONE FERTILIZER TABLET SHALL BE PLACED APPROXIMATELY FOUR (4) TO SIX (6) INCHES TO THE SIDE OF EACH PLANT AS SPECIFIED.
4. TOP OF EACH PLANT'S ROOT MEDIA SHALL BE PLACED ONE INCH OR LESS BELOW THE FILL GRADE.
5. ALL DISTANCE MEASUREMENTS SHOWN ON THE PLANS ARE APPROXIMATE.
6. NO EQUIPMENT MAY ALTER THE EXISTING CONDITIONS OF THE AREA OR DISTURB EXISTING VEGETATION.
7. ALL ELEVATIONS ARE IN NAVD 88.

MARK	DESCRIPTION	DATE	BY
1	"AS-BUILTS"	2/5/04	F.M.P.

MAIN OFFICE LOCATION:
1201 ELMWOOD PARK BLVD.
NEW ORLEANS, LA. 70123

WITH OFFICES IN:
WESTWOOD AND METAIRIE, LA.
PHONE: 504-734-0000
FAX: (504) 888-9015

DESIGNED BY: D.C.S.
CHECKED BY: A.J.P.
DRAWN BY: R.A.K.
DATE: NOV. 2001

PLOT SCALE: N.T.S.
PLOT DATE: 2-05-04

DESIGN FILE NAME: 17198-09 DWG
SUBMITTED BY: - - - - - - - - - - - - - - - -
SOLICITATION NO.

LOUISIANA DEPARTMENT OF NATURAL RESOURCES
PLANTING DETAIL & SECTION
MANDALAY BANK PROTECTION DEMO PROJECT
TERREBONNE PARISH, LOUISIANA
STATE PROJECT NO. TE-41

24" CONCRETE ARMOR UNITS & PLANTINGS
TYPICAL DETAIL & SECTION

SHEET NUMBER
9

DWG. 1 OF 1

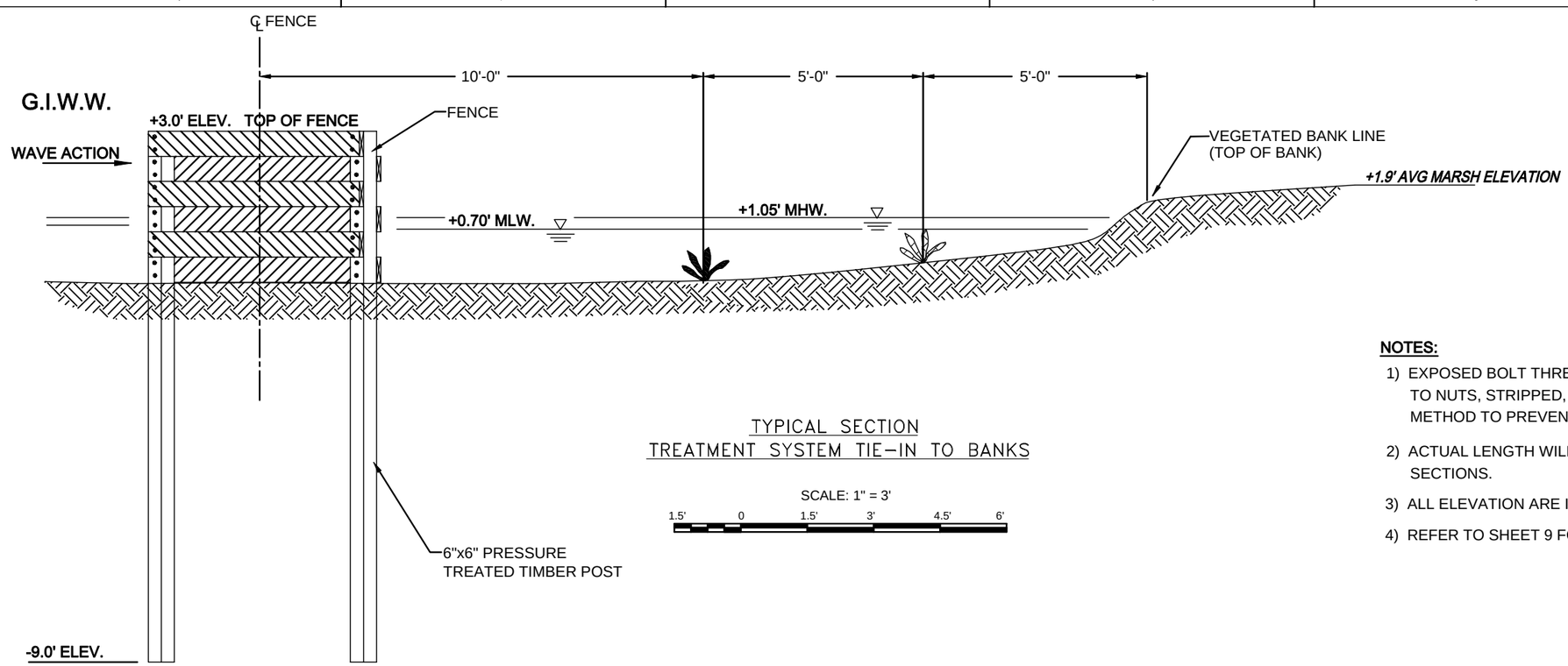

"AS-BUILTS"

TYPICAL SECTION
TREATMENT SYSTEM TIE-IN TO BANKS

SCALE: 1" = 3'

1.5' 0 1.5' 3' 4.5' 6'

NOTES:

1) EXPOSED BOLT THREADS SHALL BE EITHER TACK WELDED TO NUTS, STRIPPED, OR DAMAGED BY OTHER APPROVED METHOD TO PREVENT EASY REMOVAL.
2) ACTUAL LENGTH WILL BE DETERMINED BY 8' FENCE SECTIONS.
3) ALL ELEVATION ARE IN NAVD 88
4) REFER TO SHEET 9 FOR PLANTING DETAILS.

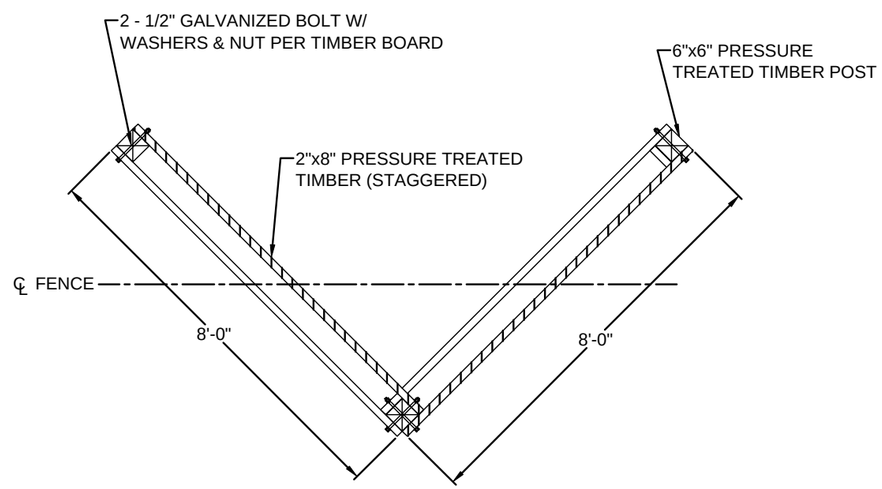

TYPICAL FENCE DETAIL

SCALE: 1" = 3'

1.5' 0 1.5' 3' 4.5' 6'

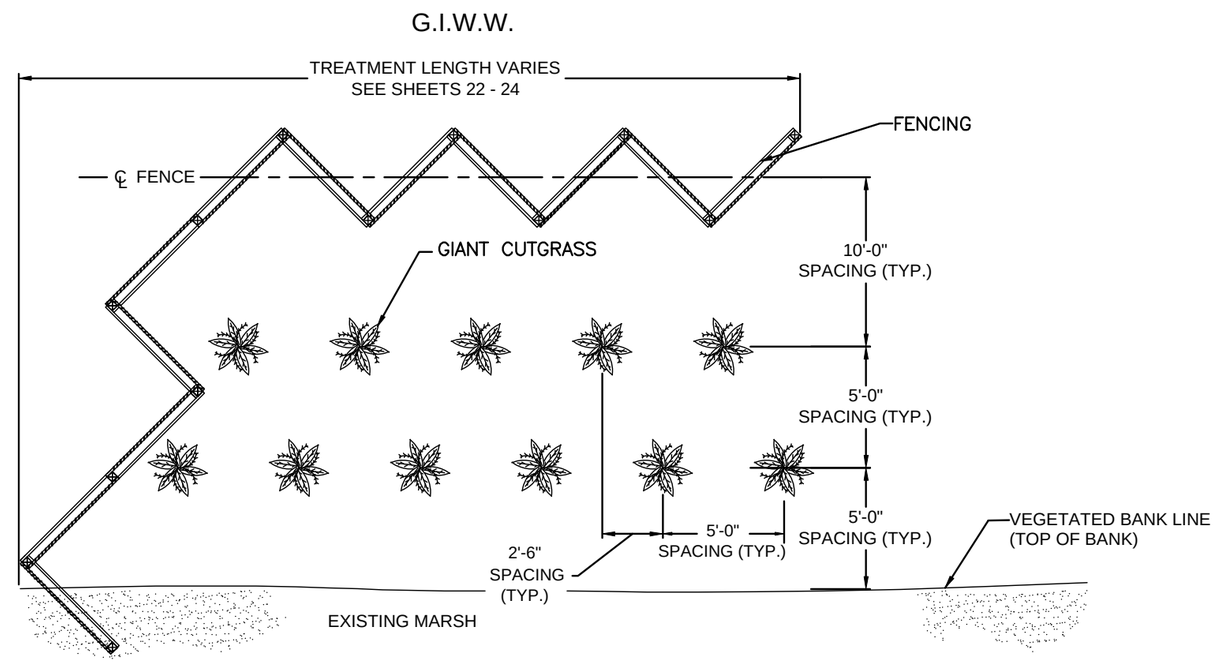

FENCING & PLANTING LAYOUT

SCALE: N.T.S.

MARK	DESCRIPTION	DATE	APP'D
1	"AS-BUILTS"	2/4/04	

MAIN OFFICE LOCATION:
1001 LEAKE AVENUE
NEW ORLEANS, LA. 70118

WITH OFFICES IN:
WESTWEGO, NEW ORLEANS, HOUMA, LA.
PHONE: (504) 736-6400
FAX: (504) 736-6415

DESIGNED BY: D.C.S.	PLOT DATE: 23/04	DESIGN FILE NAME: 1769-10.DWG	SOLICITATION NO.
CHECKED BY: J.A.B.	PLOT SCALE: N.T.S.	SUBMITTED BY:	
DRAWN BY: P.A.P.			
DATE: NOV. 2001			

LOUISIANA DEPARTMENT OF NATURAL RESOURCES
FEDERAL PROJECT NO. TE-41
STATE PROJECT NO. TE-41
MANDALAY BANK PROTECTION DEMO PROJECT
TERREBONNE PARISH, LOUISIANA

FENCING & PLANTING
TYPICAL DETAIL & SECTION

SHEET NUMBER
10

DWG. 1 OF 1

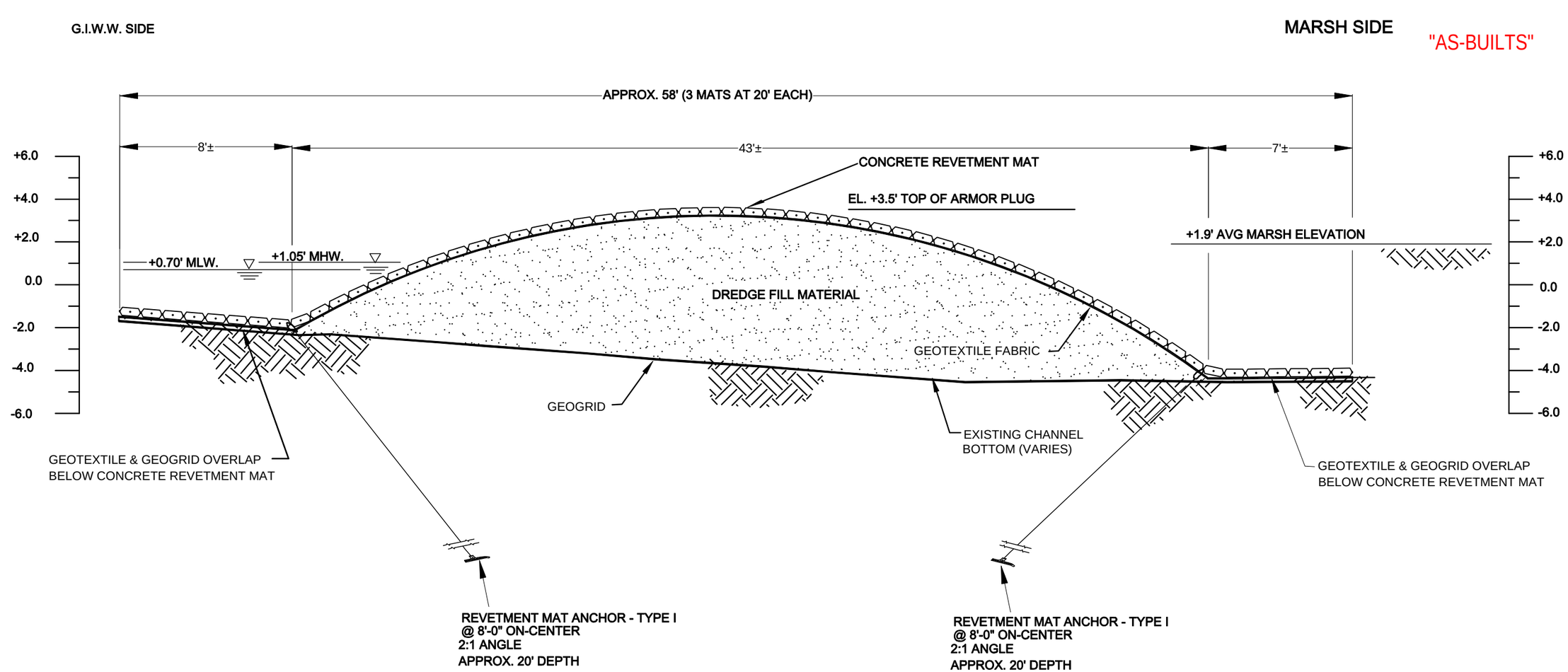

TYPICAL SECTION

SCALE: 1" = 5'

2.5' 0 2.5' 5' 7.5' 10'

NOTES:

1.) ALL ELEVATION ARE IN NAVD 88

2.) NAVIGATIONAL WARNING SIGN REQUIRED.

3.) DREDGE MATERIAL TO BE CONSTRUCTED AT DIRECTION OF ENGINEER

MAIN OFFICE LOCATION:
1011 EL SAN CARLOS
KENNER, LA 70065

WITH OFFICES IN:
WEST PASS: METAIRIE, LA.
PHONE: (504) 885-8225
FAX: (504) 885-8225

DESIGNED BY: D.C.S.
CHECKED BY: J.M.S.
DRAWN BY: R.A.P.
DATE: NOV. 2001

PLOT SCALE: N.T.S.
PLOT DATE: 2/9/04

DESIGN FILE NAME: 1769-11.DWG
SUBMITTED BY:
SOLICITATION NO.

LOUISIANA DEPARTMENT OF NATURAL RESOURCES
FEDERAL PROJECT NO. 1769 (Mod)
STATE PROJECT NO. TE-41

MANDALAY BANK PROTECTION DEMO PROJECT
TERREBONNE PARISH, LOUISIANA

ARMORED PLUG STRUCTURE
TYPICAL SECTION

SHEET NUMBER
11
DWG. 1 OF 1

MARK	DESCRIPTION	DATE	BY
1	SECTION "A"	2/9/04	SAMPLE
			SAMPLE
			SAMPLE

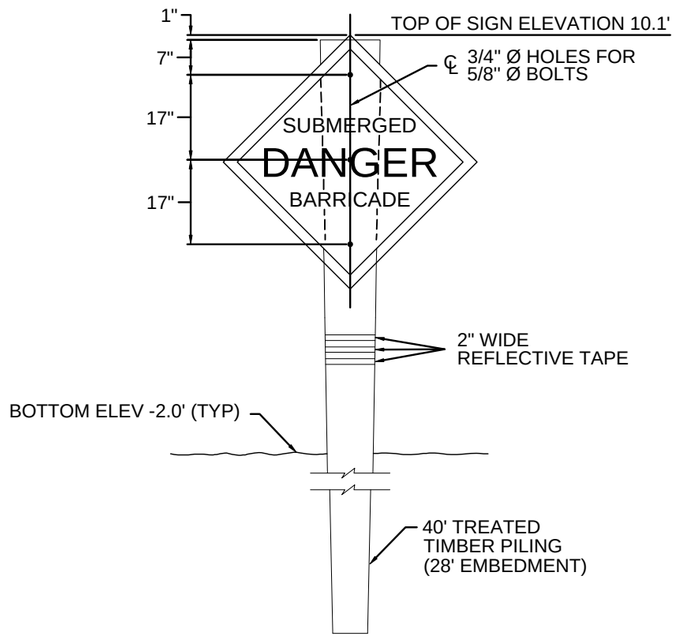

WARNING SIGN ELEVATION

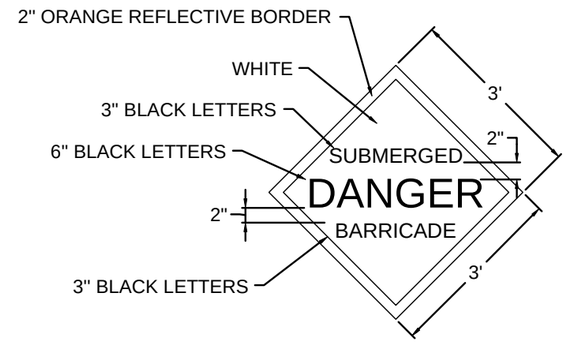

SIGN DETAIL

"AS-BUILTS"

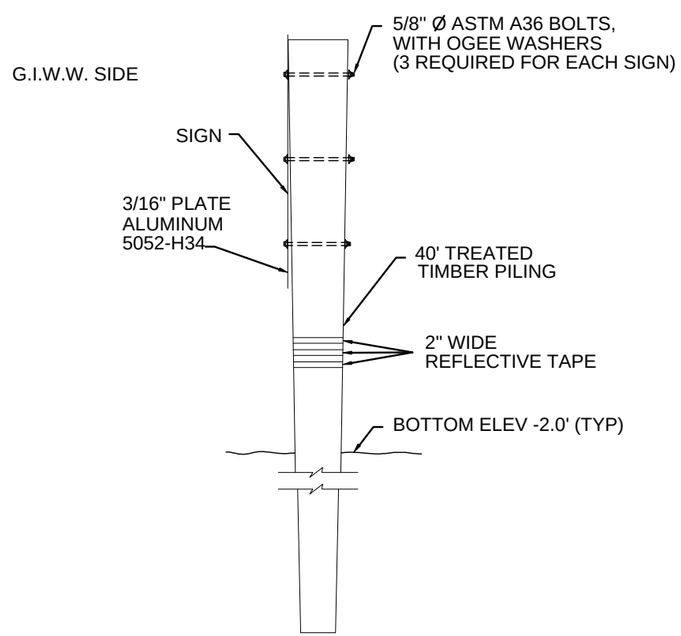

WARNING SIGN SIDE DETAIL

NOTES:

1. REFERENCES HEREIN TO THE "STANDARD SPECIFICATIONS" REFER TO THE "LA STANDARD SPECIFICATIONS FOR ROADS AND BRIDGES", LATEST EDITION, INCLUDING AMENDMENTS, BY THE DEPT. OF TRANSPORTATION AND DEVELOPMENT. MEASUREMENT AND PAYMENT WILL BE MADE AS DESCRIBED THEREIN, EXCEPT WHERE STATED OTHERWISE.
2. ONE WARNING SIGN SHALL BE INSTALLED APPROXIMATELY 25 FEET IN FRONT OF EACH TREATMENT STRUCTURE (15 TOTAL) AS SHOWN ON THE DRAWINGS OR AS DIRECTED BY THE PROJECT ENGINEER. APPROXIMATE LOCATIONS OF THE WARNING SIGNS ARE SHOWN ON SHEETS 13 THRU 27. ACTUAL LOCATIONS WILL BE DETERMINED IN THE FIELD.
3. THE 2" BORDER ON THE WARNING SIGN WILL BE A REFLECTIVE MATERIAL OF ORANGE COLOR. THE LETTERING FIELD WILL BE A REFLECTIVE MATERIAL OF WHITE COLOR. THE LETTERING FOR THE WARNING SIGNS WILL BE BLACK. ALL SIGNS MUST MEET U.S. COAST GUARD STANDARDS; IN ACCORDANCE WITH 33 CFR 330.4 (a) (1).
4. NEOPRENE WASHERS SHALL BE PLACED BETWEEN THE SIGN AND THE PILING AT ALL POINTS OF CONTACT.
5. HARDWARE FOR TIMBER CONNECTIONS SHALL BE HOT DIP GALVANIZED IN ACCORDANCE WITH SECTION 811.15 OF THE LOUISIANA STANDARD SPECIFICATIONS FOR ROADS AND BRIDGES, AS PUBLISHED BY THE LOUISIANA DEPARTMENT OF TRANSPORTATION AND DEVELOPMENT, LATEST EDITION.
6. TIMBER PILES SHALL CONFORM TO SECTIONS 804 AND 1014 OF THE LOUISIANA STANDARD SPECIFICATIONS FOR ROADS AND BRIDGES, AS PUBLISHED BY THE LOUISIANA DEPARTMENT OF TRANSPORTATION AND DEVELOPMENT, LATEST EDITION. PILES SHALL BE TREATED WITH A CREOSOTE SOLUTION CONFORMING TO AWPA P2 TO A MINIMUM RETENTION OF 16 PCF.
7. TIMBER PILING SHALL BE 40-FEET IN LENGTH WITH A 12-INCH DIAMETER BUTT AND 7-INCH DIAMETER AT THE TIP.
8. EXPOSED BOLT THREADS SHALL BE EITHER TACK WELDED TO NUTS, STRIPPED, OR DAMAGED BY OTHER APPROVED METHOD TO PREVENT EASY REMOVAL.

MARK	DESCRIPTION	DATE	BY
1	"AS-BUILTS"	2/2/04	H.E.P.

WITH OFFICES IN:
WESTWOOD BATON ROUGE, LA.
PHONE: (225) 926-8225
FAX: (225) 926-8215

MAIN OFFICE LOCATION:
10 W. BLUM DRIVE
MONROE, LA. 71203

DESIGNED BY: D.C.S.
CHECKED BY: J.A.P.
DRAWN BY: R.A.K.
DATE: NOV. 2003

DESIGN FILE NAME: 17B112.DWG
SUBMITTED BY: ----DEPUTY SECRETARY----
PLOT DATE: 2/5/04
PLOT SCALE: N.T.S.
SOLICITATION NO.

LOUISIANA DEPARTMENT OF NATURAL RESOURCES
FEDERAL PROJECT NO. CWP-2000(003)
STATE PROJECT NO. TE-41
MANDALAY BANK PROTECTION DEMO PROJECT
TERREBONNE PARISH, LOUISIANA

MISCELLANEOUS DETAILS

SHEET NUMBER 12
DWG. 1 OF 1

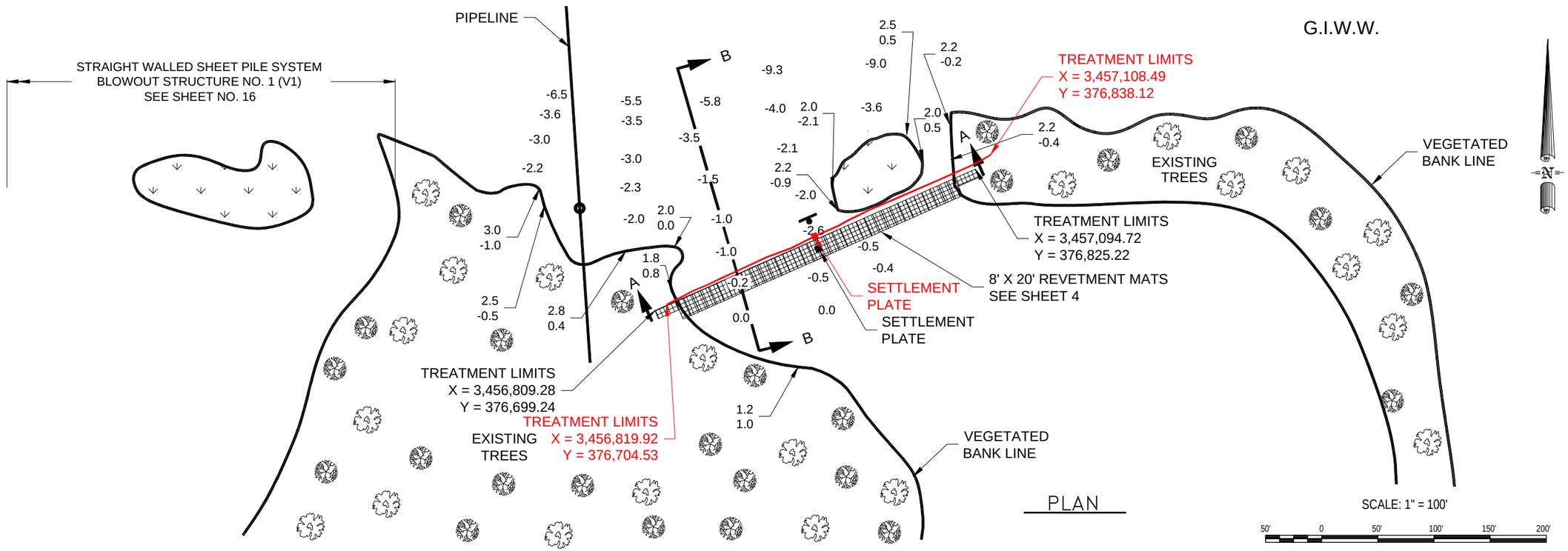

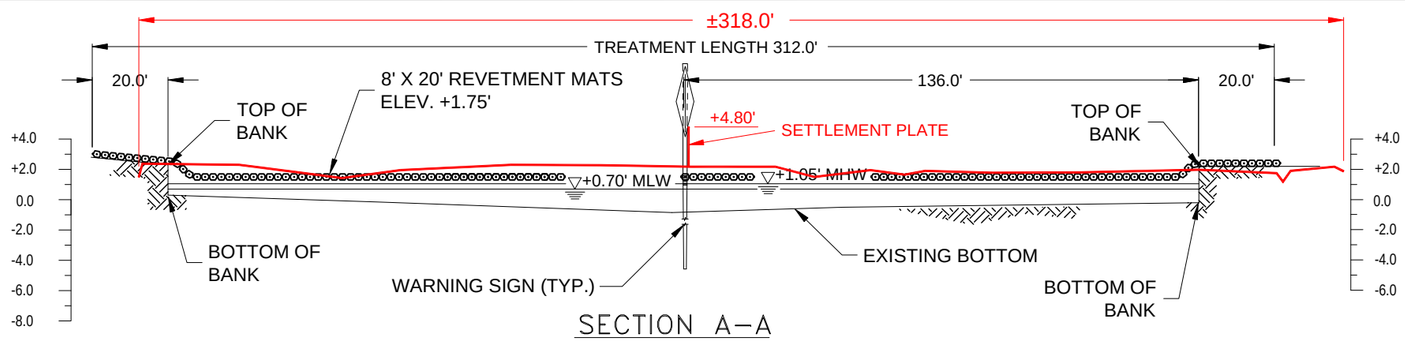

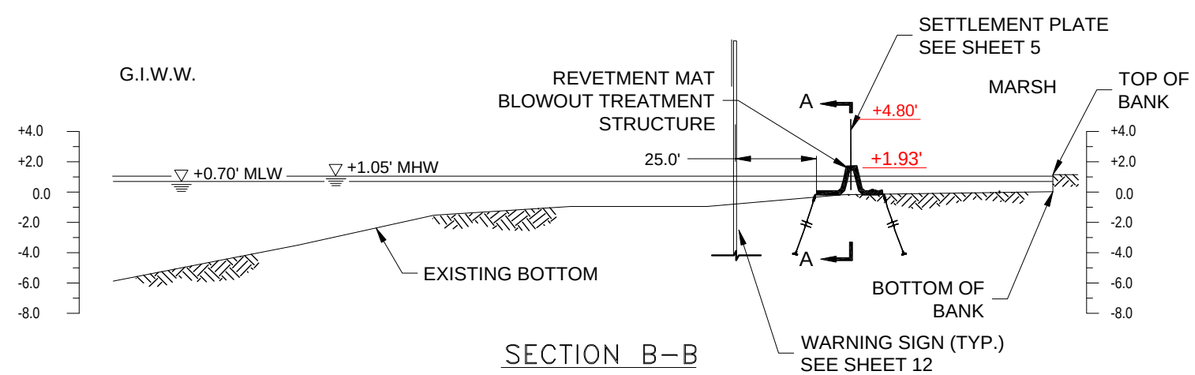

LEGEND

- EXISTING GROUND
- MARSH
- SPOIL
- TREES
- 0.0 – ELEVATION @ CENTER OF TEXT
- 1.8 – HIGH BANK ELEV.
- 0.8 – BANK BOTTOM ELEV.
- WARNING SIGN

"AS-BUILTS"

(AS-BUILTS)

NOTE:
ALL ELEVATIONS ARE IN NAVD 88

VERTICAL SCALE: 1" = 10'
5' 0 5' 10' 15' 20'

HORIZONTAL SCALE: 1" = 40'
20' 0 20' 40' 60' 80'

LOUISIANA DEPARTMENT OF NATURAL RESOURCES
PATRICK W. PITCHER, SECRETARY
MANDALAY BANK PROTECTION DEMO PROJECT
STATE PROJECT NO. TE-41
TERREBONNE PARISH, LOUISIANA

REVETMENT MAT BLOWOUT
TREATMENT STRUCTURE NO.1 (R1)

SHEET NUMBER
13

DWG. 1

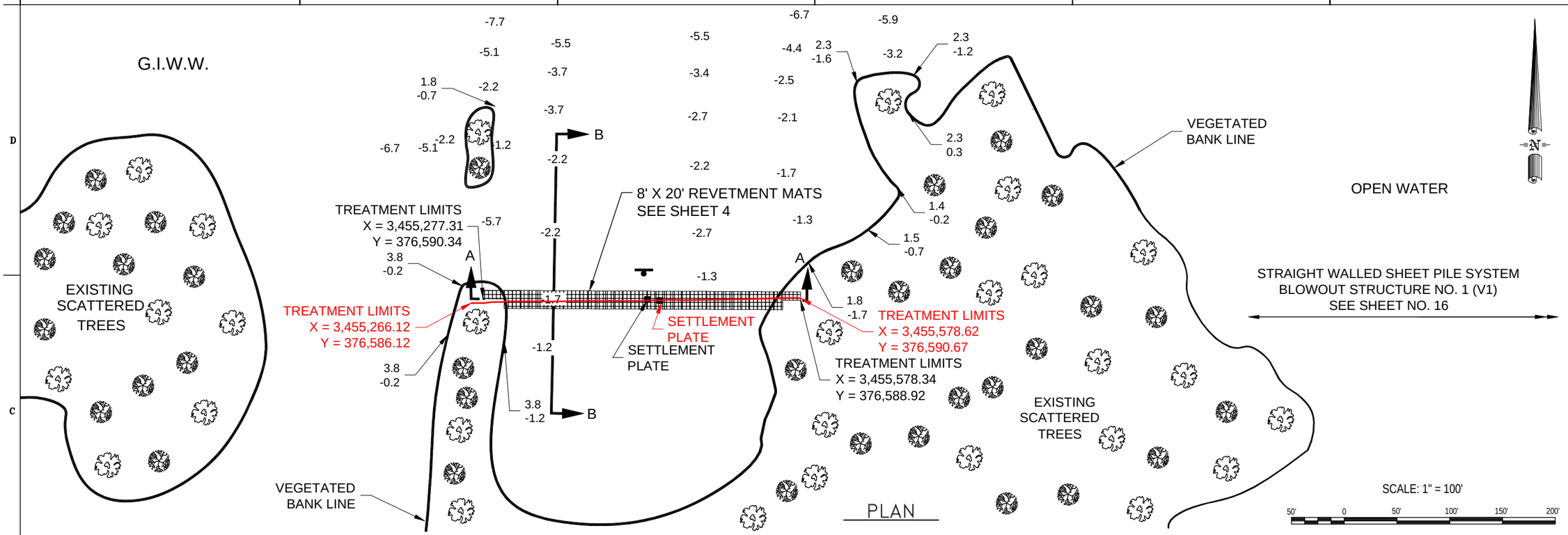

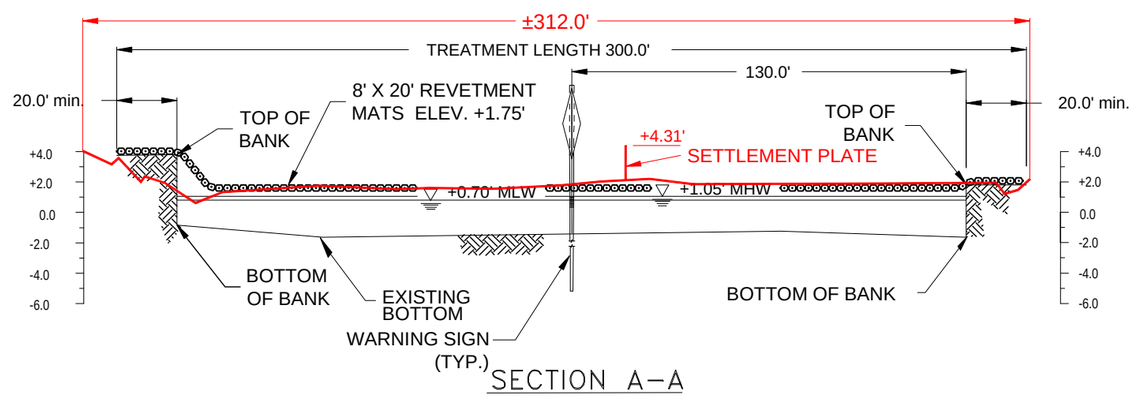

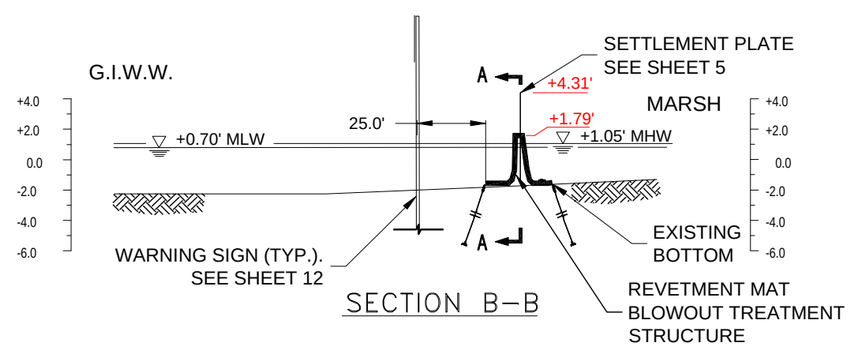

LEGEND

"AS-BUILTS"

- EXISTING GROUND
- MARSH
- SPOIL
- TREES
- 0.0 — ELEVATION @ CENTER OF TEXT
- 1.8 — HIGH BANK ELEV.
- 0.8 — BANK BOTTOM ELEV.
- WARNING SIGN

NOTE:
ALL ELEVATIONS ARE IN NAVD 88

(AS-BUILTS)

VERTICAL SCALE: 1" = 10'

5' 0 5' 10' 15' 20'

HORIZONTAL SCALE: 1" = 50'

25' 0 25' 50' 75' 100'

LOUISIANA DEPARTMENT OF NATURAL RESOURCES
FEDERAL PROJECT NO. CWP-2000
STATE PROJECT NO. TE-48
MANDALAY BANK PROTECTION DEMO PROJECT
TERREBONNE PARISH, LOUISIANA
REVETMENT MAT BLOWOUT
TREATMENT STRUCTURE NO.2 (R2)

SHEET NUMBER 14

DWG. 1

MAIN OFFICE LOCATION: 1201 EC GUILLORY BLVD. HOUMA, LA 70360

MAIN OFFICE LOCATION: 1201 EC GUILLORY BLVD. HOUMA, LA 70360

DESIGNED BY: D.C.S.
CHECKED BY: J.A.P.
DRAWN BY: A.A.A.
DATE: NOV. 2006

PLOT SCALE: SHOWN
PLOT DATE: 24/04
DESIGN FILE NAME: 1786-14.DWG
SUBMITTED BY: 9/25/2006
SOLICITATION NO.

MARK	DESCRIPTION	DATE	APPR.
1	AS-BUILTS	10/16/06	LJ

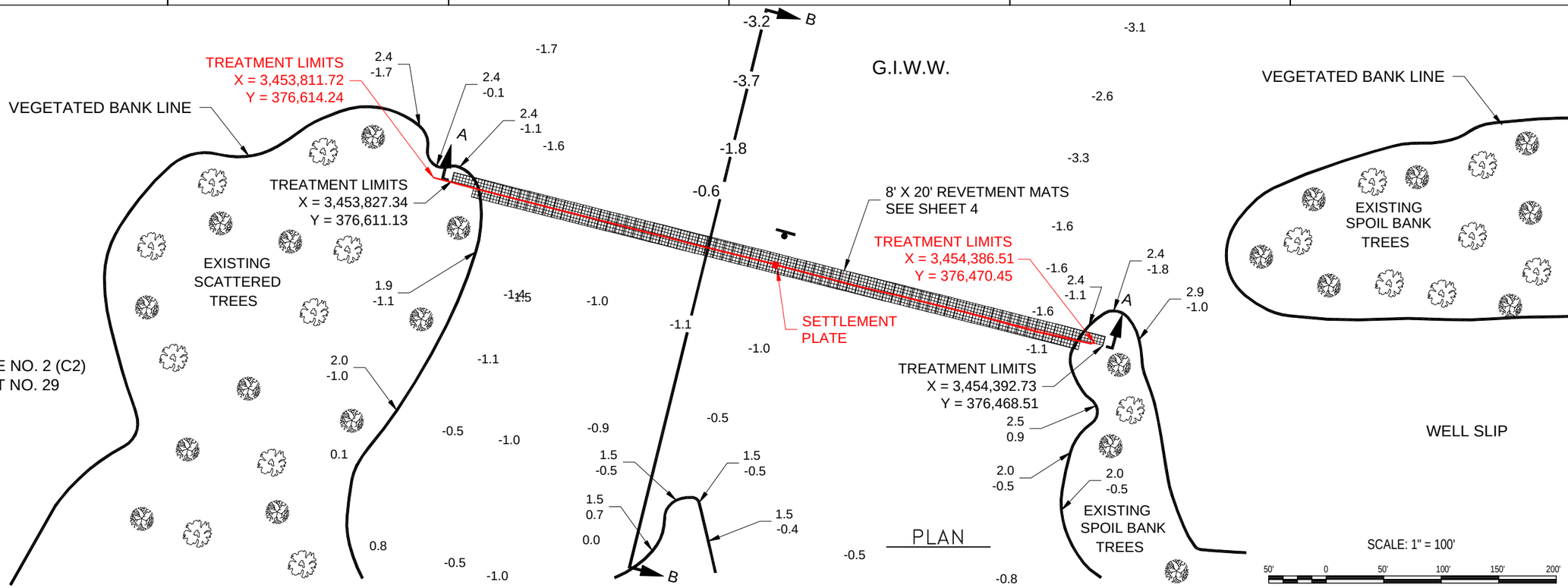

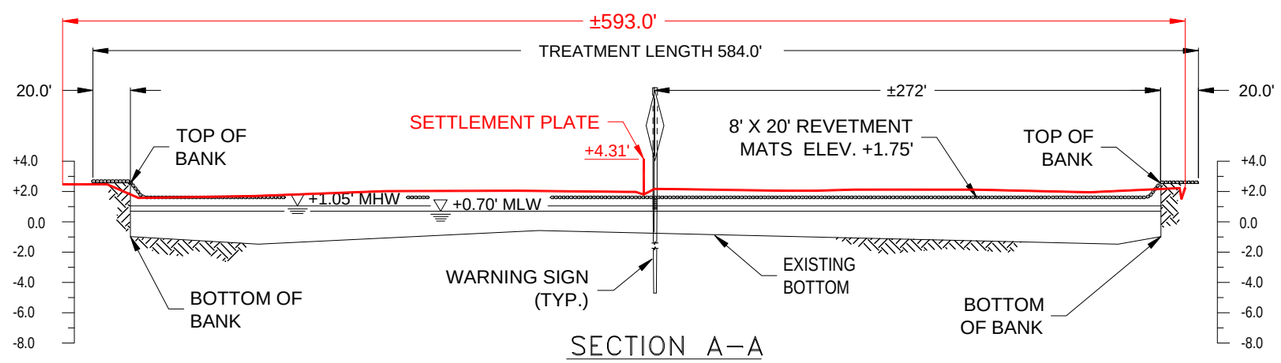

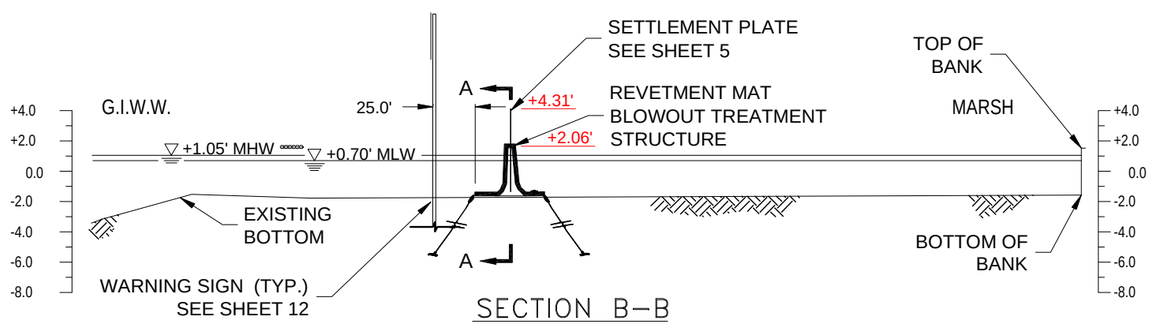

"AS-BUILTS"

LEGEND

- EXISTING GROUND
- MARSH
- SPOIL
- TREES
- 0.0 – ELEVATION @ CENTER OF TEXT
- 1.8 – HIGH BANK ELEV.
- 0.8 – BANK BOTTOM ELEV.
- WARNING SIGN

NOTE:
ALL ELEVATIONS ARE IN NAVD 88

VERTICAL SCALE: 1" = 10'
5' 0 5' 10' 15' 20'

HORIZONTAL SCALE: 1" = 80'
40' 0 40' 80' 120' 160'

(AS-BUILTS)

MARK	DESCRIPTION	DATE	APPR.
1	AS-BUILTS	5/14/10	

DATE	APPR.	DESCRIPTION

WITH OFFICES IN:
NEW ORLEANS, LOUISIANA
HOUMA, LOUISIANA
BATON ROUGE, LOUISIANA
PHONE: (225) 926-8202

MAIN OFFICE LOCATION:
1001 SOUTH BURNSIDE AVENUE
GONZALES, LA 70737

Coastal Resources and Environmental Consultants, Inc.

DESIGN FILE NAME: 1799-15.DWG
SUBMITTED BY:
SOLICITATION NO.:

PLOT DATE:
PLOT SCALE: 1=404
SHOWN

DESIGNED BY: D.C.S.
CHECKED BY: J.A.S.
DRAWN BY: R.A.P.
DATE: NOV. 2001

LOUISIANA DEPARTMENT OF NATURAL RESOURCES
FEDERAL PROJECT NO. 1799-15
STATE PROJECT NO. TE-45
MANDALAY BANK PROTECTION DEMO. PROJECT
TERREBONNE PARISH, LOUISIANA

REVETMENT MAT BLOWOUT TREATMENT STRUCTURE (NO.3 (R3)

SHEET NUMBER
15
DWG. 1 OF 1

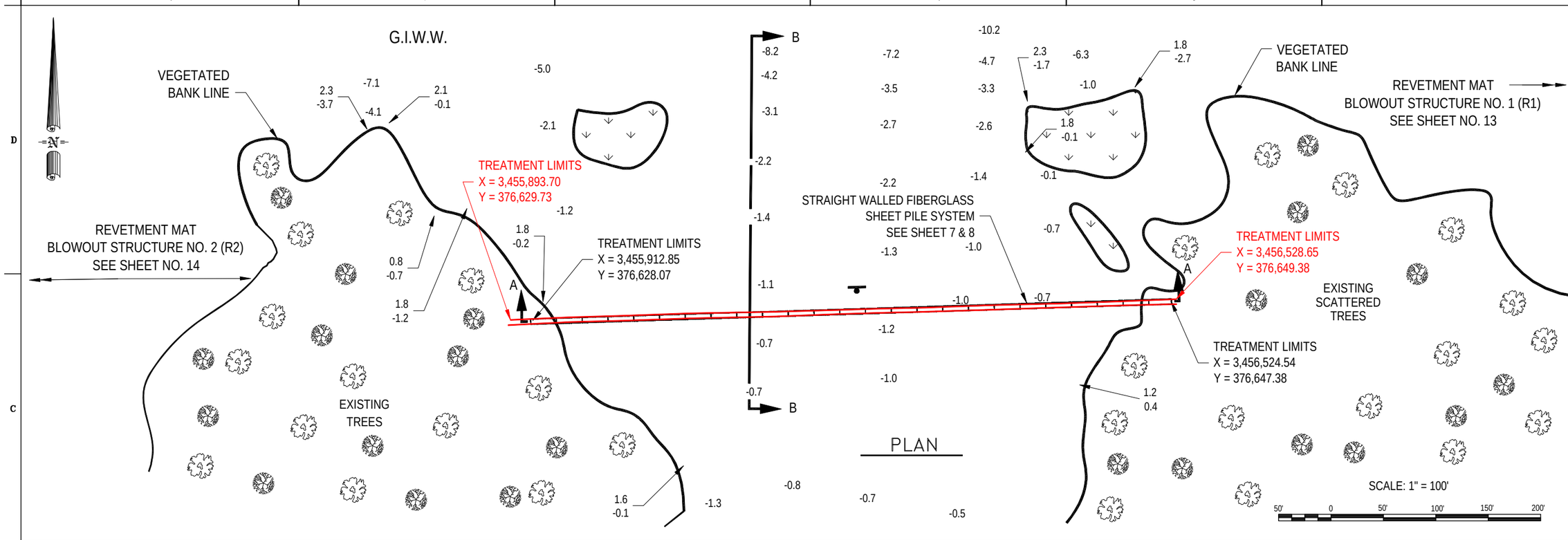

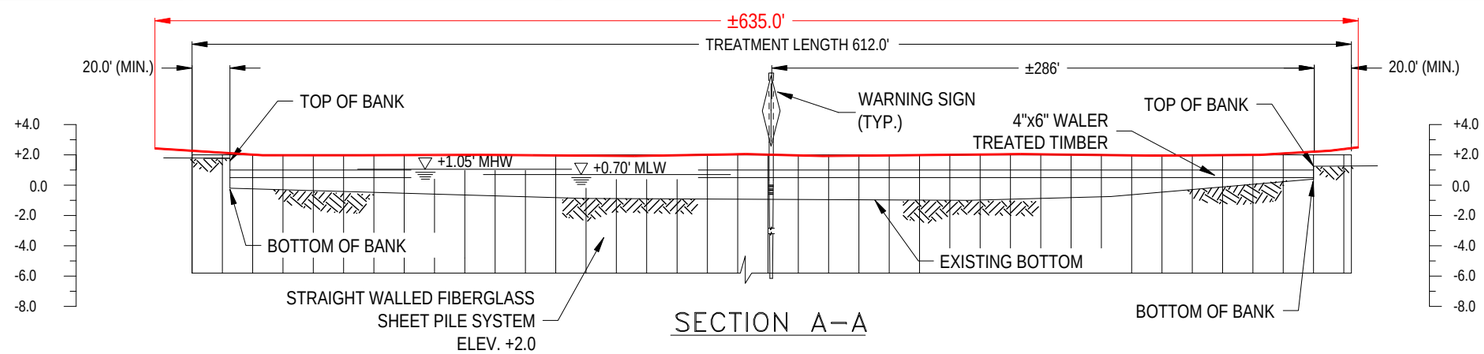

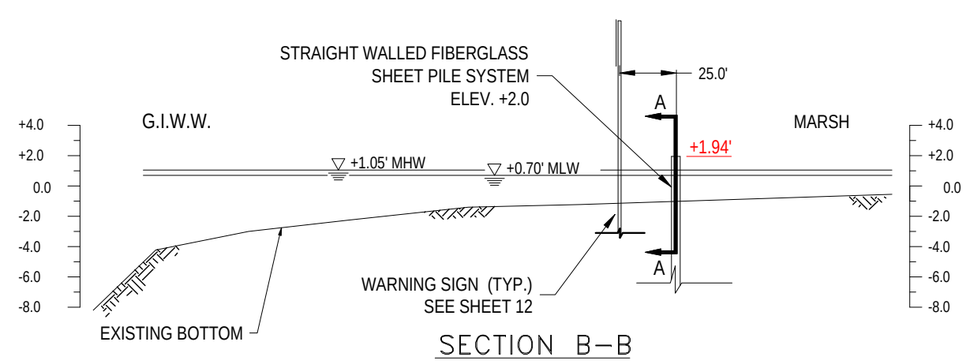

"AS-BUILTS"

LEGEND

- EXISTING GROUND
- MARSH
- SPOIL
- TREES
- 0.0 — ELEVATION @ CENTER OF TEXT
- 1.8 — HIGH BANK ELEV.
- 0.8 — BANK BOTTOM ELEV.
- WARNING SIGN

(AS-BUILTS)

NOTE:
ALL ELEVATIONS ARE IN NAVD 88

VERTICAL SCALE: 1" = 10'

HORIZONTAL SCALE: 1" = 80'

LOUISIANA DEPARTMENT OF NATURAL RESOURCES
FEDERAL PROJECT NO. CWP-1-LA-01-01-Barataria
STATE PROJECT NO. TE-45
MANDALAY BANK PROTECTION DEMO PROJECT
BARATARIA BAY, JEFFERSON PARISH, LOUISIANA

STRAIGHT WALLED FIBERGLASS SHEET PILE SYSTEM BLOWOUT TREATMENT STRUCTURE NO.1 (#1)

SHEET NUMBER 16

DWG. 1 OF 1

MARK	DESCRIPTION	DATE	APP.	MARK	DESCRIPTION	DATE	APP.
1	AS-BUILTS	12/14/15					

MAIN OFFICE LOCATION: NEW ORLEANS, LOUISIANA

DESIGNED BY: D.C.S.
CHECKED BY: J.A.S.
DRAWN BY: R.A.P.
DATE: NOV. 2005

PLOT SCALE: 1"=100'
PLOT DATE: 12/09/05
DESIGN FILE NAME: 1788-16.DWG
SUBMITTED BY:
SOLICITATION NO.

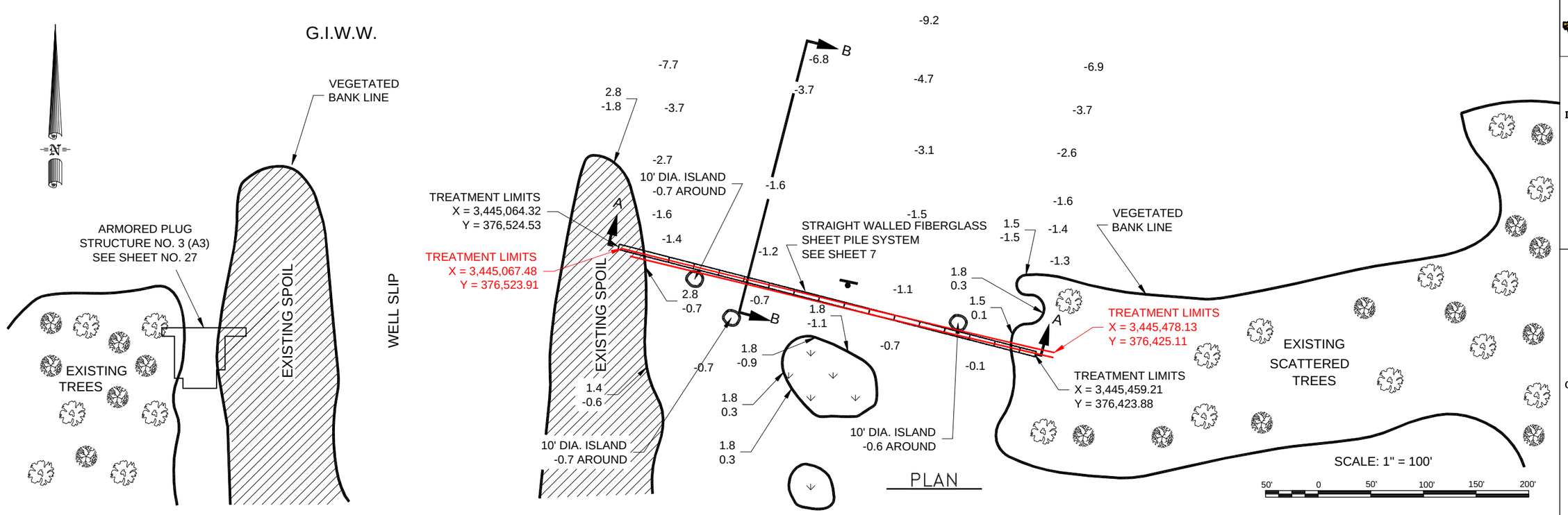

PLAN

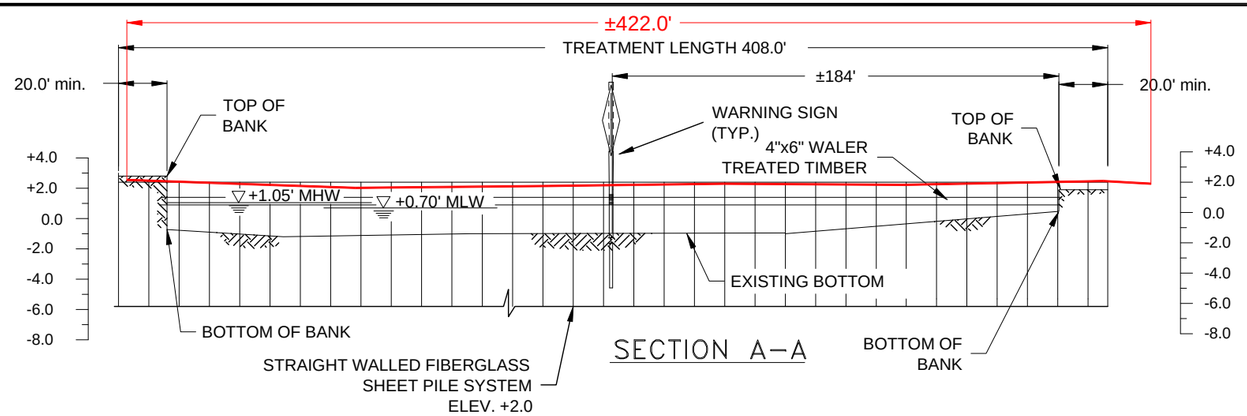

SECTION A–A

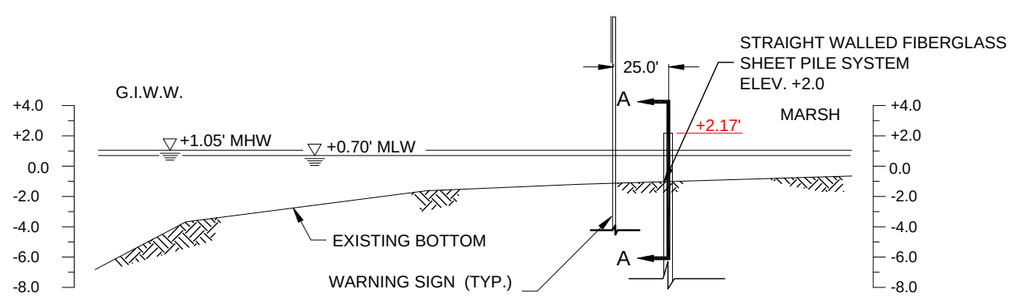

SECTION B–B

"AS-BUILTS"

LEGEND

- EXISTING GROUND
- MARSH
- SPOIL
- TREES
- 0.0 — ELEVATION @ CENTER OF TEXT
- 1.8 — HIGH BANK ELEV.
- 0.8 — BANK BOTTOM ELEV.
- WARNING SIGN

(AS-BUILTS)

NOTE:
ALL ELEVATIONS ARE IN NAVD 88

VERTICAL SCALE: 1" = 10'
5' 0 5' 10' 15' 20'

HORIZONTAL SCALE: 1" = 60'
30' 0 30' 60' 90' 120'

MARK	DESCRIPTION	DATE	APP'D	MARK	DESCRIPTION	DATE	APP'D
1	"AS-BUILTS"	3/16/10	LFR				

WITH OFFICES IN
WESTWOOD AND BATON ROUGE, LA
PHONE: (504) 436-9666
FAX: (504) 436-9815

MAIN OFFICE LOCATION:
1787 WEST BANK DRIVE
HARVEY, LA 70058

Coastal Environmental Consultants, Inc.

DESIGNED BY:	D.C.S.	PLOT SCALE:	1" = 100'
CHECKED BY:	J.A.S.	PLOT DATE:	2/16/04
DRAWN BY:	P.A.P.	DESIGN FILE NAME:	1789-37.DWG
DATE:	NOV. 2001	SUBMITTED BY:	2/16/2010

SOLICITATION NO.

LOUISIANA DEPARTMENT OF NATURAL RESOURCES
FEDERAL PROJECT NO. 2F-Barrio
STATE PROJECT NO. TE-41
MANDALAY BANK PROTECTION DEMO PROJECT
TERREBONNE PARISH, LOUISIANA

STRAIGHT WALLED FIBERGLASS SHEET PILE SYSTEM BLOWOUT TREATMENT STRUCTURE NO. 2 (V2)

SHEET NUMBER 17
DWG. 1 OF 1

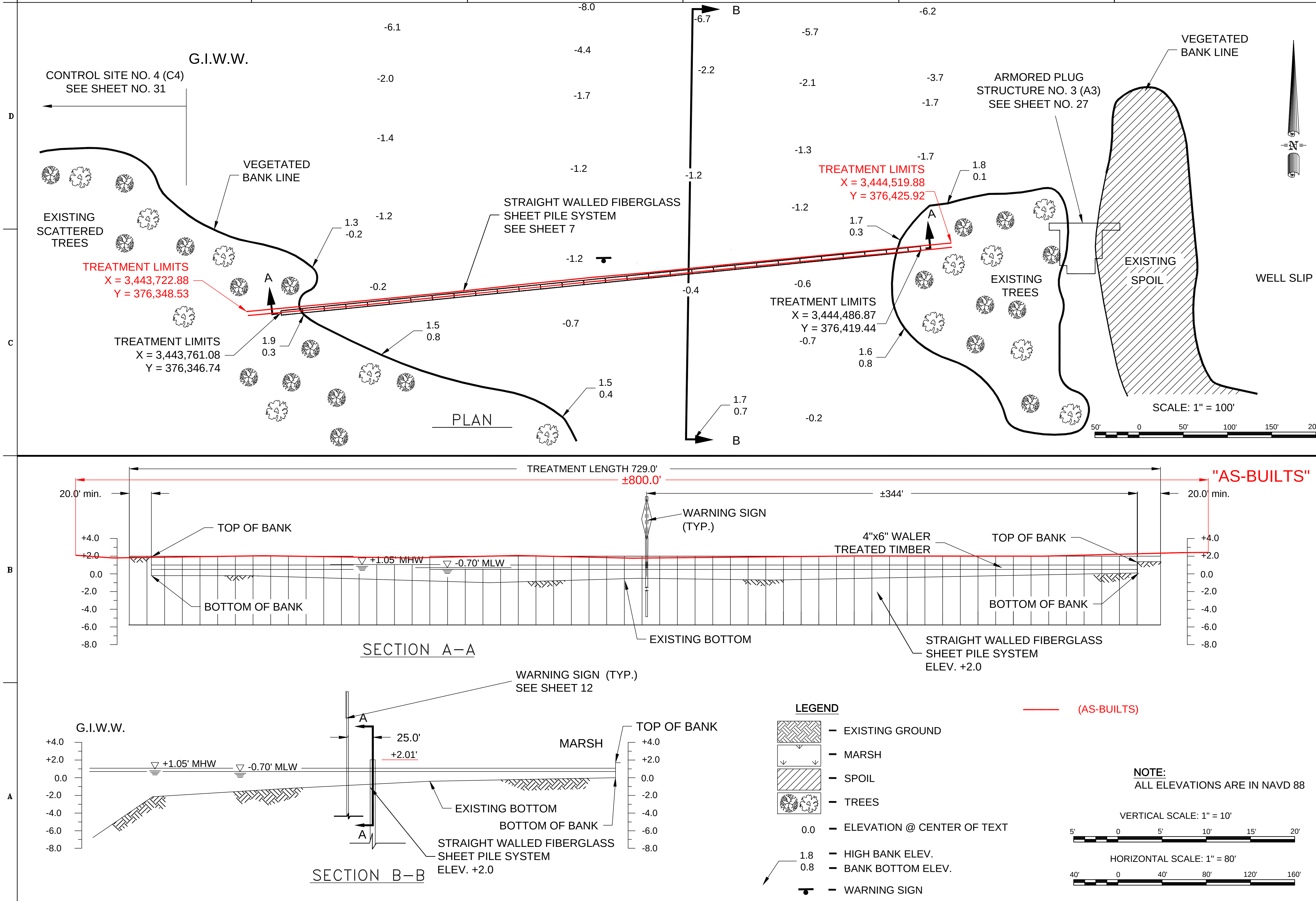

NOTE:
ALL ELEVATIONS ARE IN NAVD 88

MARK	DATE	APPR.	DESCRIPTION
1	2/4/04	J.M.P.	"AS-BUILTS"

MAIN OFFICE LOCATION: 197 ELYSIAN DRIVE HOUMA, LA. 70360
WITH OFFICES IN WESTWEGO AND BATON ROUGE, LA. PHONE: (504) 868-3434 FAX: (504) 868-8513

Coastal Engineering and Environmental Consultants, Inc.

DESIGNED BY: D.C.S.
CHECKED BY: J.M.P.
DRAWN BY: R.A.P.
DATE: NOV. 2001
PLOT SCALE: 1"=100'
PLOT DATE: 2/4/04
DESIGN FILE NAME: 1768-18.DWG
SUBMITTED BY: DESIGN ENGINEER
SOLICITATION NO.

LOUISIANA DEPARTMENT OF NATURAL RESOURCES
FEDERAL PROJECT NO. XTE-Demo
STATE PROJECT NO. TE-41
MANDALAY BANK PROTECTION DEMO PROJECT
TERREBONNE PARISH, LOUISIANA

STRAIGHT WALLED FIBERGLASS SHEET PILE SYSTEM BLOWOUT TREATMENT STRUCTURE NO.3 (V3)

SHEET NUMBER 18
DWG. 1 OF 1

LEGEND

- EXISTING GROUND
- MARSH
- SPOIL
- TREES
- 0.0 — ELEVATION @ CENTER OF TEXT
- 1.8 — HIGH BANK ELEV.
- 0.8 — BANK BOTTOM ELEV.
- DOUBLE ROW 24" CONCRETE ARMOR UNIT
- GIANT CUTGRASS
- WARNING SIGN

NOTE:
ALL ELEVATIONS ARE IN NAVD 88

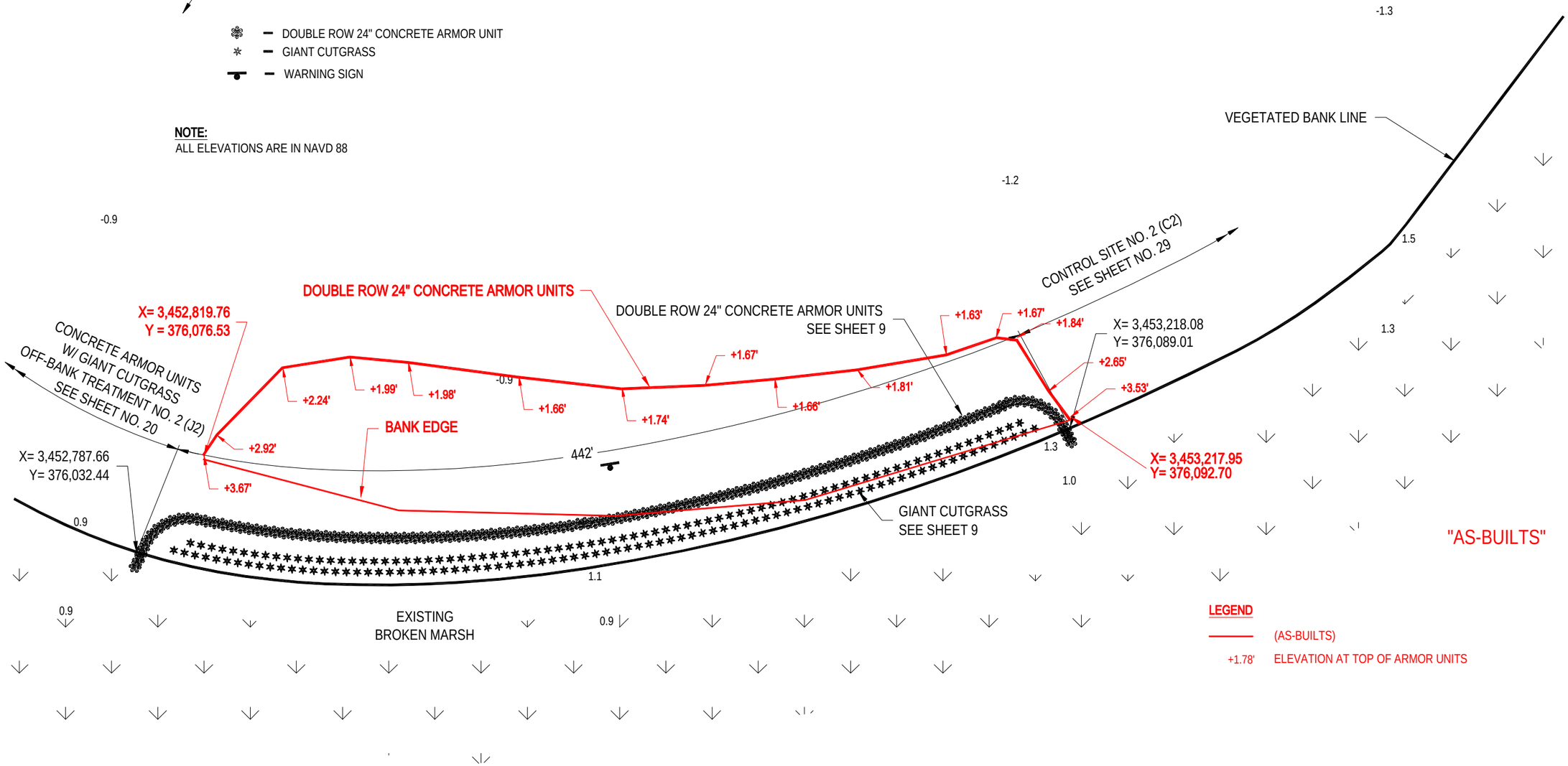

LEGEND

- (AS-BUILTS)
- +1.78' ELEVATION AT TOP OF ARMOR UNITS

SCALE: 1" = 50'

25' 0 25' 50' 75' 100'

PLAN

LOUISIANA DEPARTMENT OF NATURAL RESOURCES
DIVISION OF ADMINISTRATION
STATE PROJECT NO. TE-40
MANDALAY BANK PROTECTION DEMO PROJECT
TERREBONNE PARISH, LOUISIANA

CONCRETE ARMOR UNITS W/ GIANT CUTGRASS OFF-BANK TREATMENT NO.1 (J1)

SHEET NUMBER 19

DWG. 1 OF 1

DESIGNED BY: D.C.S.
CHECKED BY: J.A.P.
DRAWN BY: R.A.P.
DATE: NOV. 2005

PLOT SCALE: 1"=50'
PLOT DATE: 2/28/04
DESIGN FILE NAME: J1B0-19.DWG
SUBMITTED BY: 2/26/2004
SOLICITATION NO.

MAIN OFFICE LOCATION:
1201 EAST 4th STREET
HOUMA, LA 70360

WITH OFFICES IN:
HOUMA, LA • NEW ORLEANS, LA.
Phone: (504) 868-9960
Fax: (504) 868-9970

Dantzler, Inc.
Consulting Engineers and Environmental Scientists

MARK	DESCRIPTION	DATE	APPR.
1	NON-AS-BUILT TO AS-BUILT	2/26/04	CHK'D

X = 3,452,564.14
Y = 376,365.48

G.I.W.W.

X = 3,452,594.42
Y = 376,279.77

+2.51'

+2.11'

+2.74'

+2.44'

+3.77'

BANKS EDGE

+2.39'

DOUBLE ROW 24" CONCRETE ARMOR UNITS

+2.52'

429'

-0.9

"AS-BUILTS"

GIANT CUTGRASS
SEE SHEET 9

+2.49'

DOUBLE ROW 24" CONCRETE ARMOR UNITS
SEE SHEET 9

+2.54'

X = 3,452,829.45
Y = 376,099.45

+2.75'

-0.9

CONCRETE ARMOR UNITS
W/ GIANT CUTGRASS
OFF-BANK TREATMENT NO 1 (J1)
SEE SHEET NO. 19

EXISTING
BROKEN MARSH

X = 3,452,787.66
Y = 376,032.44

VEGETATED BANK LINE

0.9

1.1

0.9

0.9

LEGEND

(AS-BUILTS)

+1.78' ELEVATION AT TOP OF ARMOR UNITS

LEGEND

- EXISTING GROUND
- MARSH
- SPOIL
- TREES
- 0.0 — ELEVATION @ CENTER OF TEXT
- 1.8 — HIGH BANK ELEV.
- 0.8 — BANK BOTTOM ELEV.
- DOUBLE ROW 24" CONCRETE ARMOR UNIT
- GIANT CUTGRASS
- WARNING SIGN

NOTE:
ALL ELEVATIONS ARE IN NAVD 88

SCALE: 1" = 50'

25' 0 25' 50' 75' 100'

PLAN

MARK	DESCRIPTION	DATE	APPR.	MARK	DESCRIPTION	DATE	APPR.
1	"AS-BUILTS"	2/16/06	J.N.T.				

MAIN OFFICE LOCATION:
WE BELONG HERE
HOUMA, LA. 70360

WITH OFFICES IN:
WESTWOOD AND BATON ROUGE, LA
PHONE: (985) 868-8250
FAX: (985) 868-8835

DESIGN FILE NAME: 1789-30.DWG
SUBMITTED BY: 09-24-2004
SOLICITATION NO.

PLOT DATE: 2/28/04
PLOT SCALE: 1"=50'

DESIGNED BY: D.C.S.
CHECKED BY: J.A.P.
DRAWN BY: P.A.P.
DATE: NOV. 2001

LOUISIANA DEPARTMENT OF NATURAL RESOURCES
FEDERAL PROJECT NO. TE-41
STATE PROJECT NO. TE-41
MANDALAY BANK PROTECTION DEMO PROJECT
TERREBONNE PARISH, LOUISIANA

CONCRETE ARMOR UNITS W/ GIANT CUTGRASS OFF-BANK TREATMENT NO.2 (J2)

SHEET NUMBER
20

DWG. 1 OF 1

EXISTING TREES

G.I.W.W.

FENCING W/ GIANT CUTGRASS
OFF-BANK TREATMENT NO 2 (F2)
SEE SHEET NO. 23

X = 3,449,489.63
Y = 376,343.58

X = 3,449,496.59
Y = 376,335.55

DOUBLE ROW 24" CONCRETE ARMOR UNITS

DOUBLE ROW 24" CONCRETE ARMOR UNITS
SEE SHEET 9

GIANT CUTGRASS
SEE SHEET 9

370'

"AS-BUILTS"

VEGETATED BANK LINE

VEGETATED BANK LINE

FENCING W/ GIANT CUTGRASS
OFF-BANK TREATMENT NO 3 (F3)
SEE SHEET NO. 24

EXISTING BROKEN MARSH

EXISTING BROKEN MARSH

X = 3,449,217.95
Y = 376,101.59

X = 3,449,223.58
Y = 376,093.25

TIE-IN TO
ARMORED PLUG
STRUCTURE NO. 2
(A2) SHEET NO. 26

PLAN

LEGEND

(AS-BUILTS)

+1.78' ELEVATION AT TOP OF ARMOR UNITS

LEGEND

- EXISTING GROUND
- MARSH
- SPOIL
- TREES

0.0 – ELEVATION @ CENTER OF TEXT

1.8 – HIGH BANK ELEV.
0.8 – BANK BOTTOM ELEV.

- DOUBLE ROW 24" CONCRETE ARMOR UNITS
- GIANT CUTGRASS
- WARNING SIGN

NOTE:
ALL ELEVATIONS ARE IN NAVD 88

SCALE: 1" = 50'

25' 0 25' 50' 75' 100'

MARK	DESCRIPTION	DATE	APP'D
1	AS-BUILTS	5/16/06	

MAIN OFFICE LOCATION:
W.L. BLANCHARD
NEW ORLEANS, LA.

WITH OFFICES IN:
WESTWEGO, LA. BATON ROUGE, LA.
FAYETTEVILLE, NC.
PHONE: (504) 368-0500

Coastal Environmental Consultants, Inc.

PLOT DATE	2/16/04
PLOT SCALE	1=50
DESIGN FILE NAME	178-21.DWG
SUBMITTED BY	
SOLICITATION NO.	

DESIGNED BY: D.C.S.
DRAWN BY: J.A.S.
CHECKED BY: R.A.P.
DATE: NOV. 2003

LOUISIANA DEPARTMENT OF NATURAL RESOURCES
FEDERAL PROJECT NO. LA-05-P01
STATE PROJECT NO. TE-45
MAND-ALAY BANK PROTECTION DEMO PROJECT
TERREBONNE PARISH, LOUISIANA

CONCRETE ARMOR UNITS W/ GIANT CUTGRASS OFF-BANK TREATMENT NO.3 (A3)

SHEET NUMBER
21

DWG. 1 OF 1

G.I.W.W.

-1.6
-1.2
-0.9
-1.6
-1.1
-0.6
-0.1
0.3
0.9
0.9
0.8
0.7
1.1
1.0
0.7

VEGETATED BANK LINE

CONTROL SITE NO. 3 (C3)
SEE SHEET NO. 30

1.4
0.5

1.0

1.4
0.4

X = 3,450,023.09
Y = 376,414.37

+2.99'
FENCING
+2.97'
FENCING
SEE SHEET 10
+2.94'
+2.86'
+3.51'
+2.99'
372'

"AS-BUILTS"

X = 3,450,291.99
Y = 376,311.22

GIANT CUTGRASS
SEE SHEET 9

+3.02'
+3.11'
+3.10'

EXISTING
BROKEN MARSH

X = 3,450,617.97
Y = 376,202.84

+3.08'

TIE-IN TO
ARMORED PLUG
STRUCTURE NO. 1
(A1) SEE SHEET
NO. 25

X = 3,450,604.70
Y = 376,192.39

VEGETATED BANK LINE

LEGEND

- EXISTING GROUND
- MARSH
- SPOIL
- TREES
- 0.0 — ELEVATION @ CENTER OF TEXT
- 1.8 — HIGH BANK ELEV.
- 0.8 — BANK BOTTOM ELEV.
- FENCING
- GIANT CUTGRASS
- WARNING SIGN

LEGEND

- (AS-BUILTS)
- +1.78' ELEVATION AT TOP OF FENCE

NOTE:
ALL ELEVATIONS ARE IN NAVD 88

PLAN

SCALE: 1" = 50'

25' 0 25' 50' 75' 100'

MARK	DESCRIPTION	DATE	APPR.	MARK	DESCRIPTION	DATE	APPR.
1	"AS-BUILTS"	7/16/04	K.N.F.				

LOUISIANA DEPARTMENT OF NATURAL RESOURCES
PETROLEUM AND GAS OPERATIONS
MANDALAY BANK PROTECTION DEMO PROJECT
STATE PROJECT NO. TE-41
FENCING W/ GIANT CUTGRASS
OFF-BANK TREATMENT NO.1 (F1)

MAIN OFFICE LOCATION:
1201 CAPITOL ACCESS ROAD
BATON ROUGE, LA 70804

WITH OFFICES IN:
NEW ORLEANS, LA • HOUMA, LA • LAFAYETTE, LA
PHONE: (225) 928-4500
FAX: (225) 928-4581

Coastal Environments, Inc.
Coastal Engineers and Environmental Consultants

DESIGNED BY:	D.C.S.
CHECKED BY:	J.L.A.
DRAWN BY:	R.A.P.
DATE:	NOV. 2005
PLOT SCALE:	1"=50'
PLOT DATE:	4/18/04
DESIGN FILE NAME:	1786-12.DWG
SUBMITTED BY:	
SOLICITATION NO.	

SHEET NUMBER
22
DWG. 1 OF 1

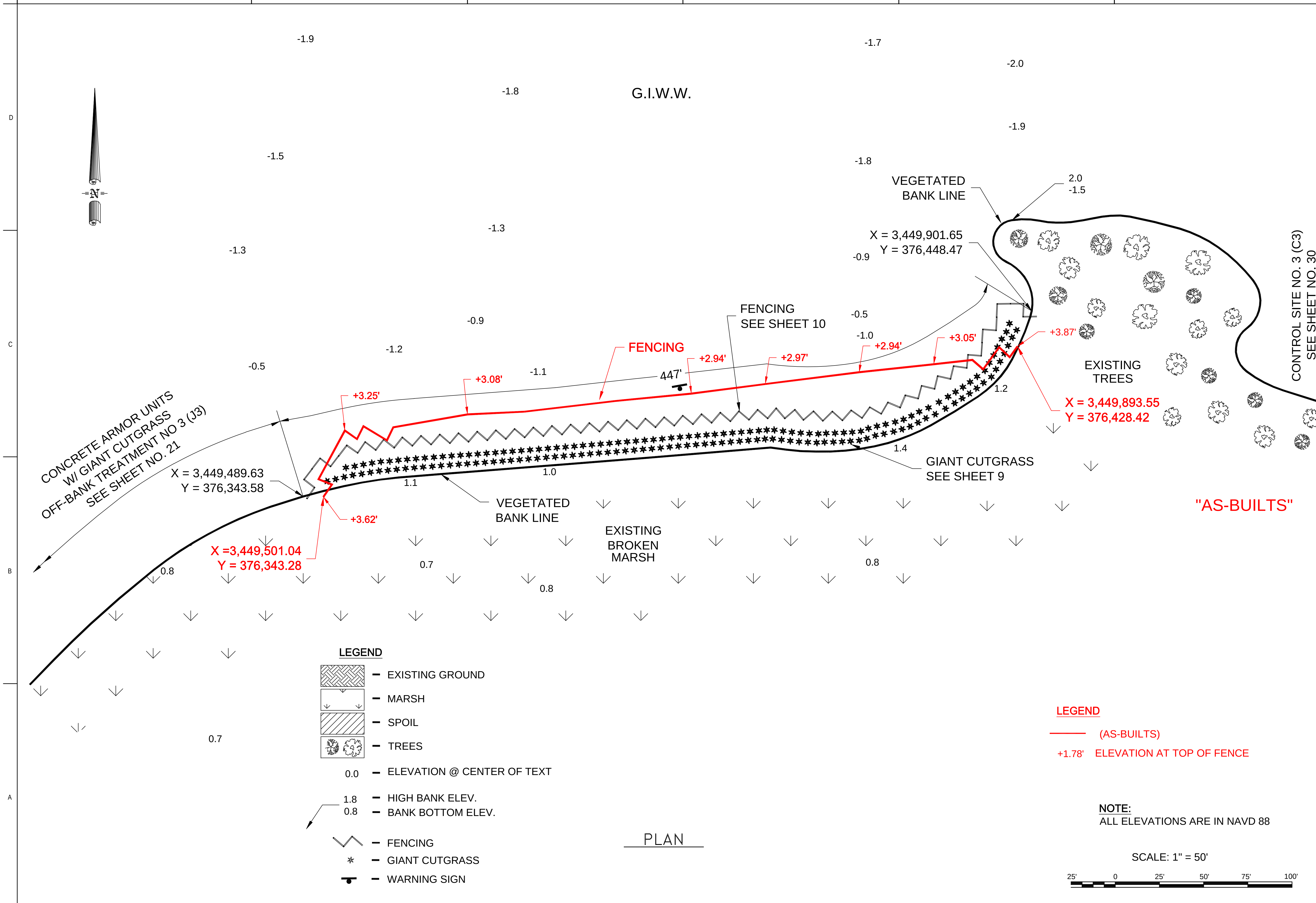

MARK	DESCRIPTION	DATE	APPR.
1	"AS-BUILTS"	2/16/04	J.M.P.

MAIN OFFICE LOCATION:
197 ELYSIAN DRIVE
HOUMA, LA. 70360

WITH OFFICES IN
WESTWEGO AND BATON ROUGE, LA.
PHONE: (504) 868-3434
FAX: (504) 868-8513

COASTAL ENGINEERING AND ENVIRONMENTAL CONSULTANTS, INC.

DESIGNED BY: D.C.S.
CHECKED BY: J.M.P.
DRAWN BY: R.A.P.
DATE: NOV. 2001

PLOT SCALE: 1"=50'
PLOT DATE: 2/16/04
DESIGN FILE NAME: 1768-23.DWG
SUBMITTED BY: DESIGN ENGINEER
SOLICITATION NO.

LOUISIANA DEPARTMENT OF NATURAL RESOURCES
FEDERAL PROJECT NO. XTE-Demo
STATE PROJECT NO. TE-41
MANDALAY BANK PROTECTION DEMO PROJECT
TERREBONNE PARISH, LOUISIANA

FENCING W/ GIANT CUTGRASS
OFF-BANK TREATMENT NO.2 (F2)

SHEET NUMBER 23
DWG. 1 OF 1

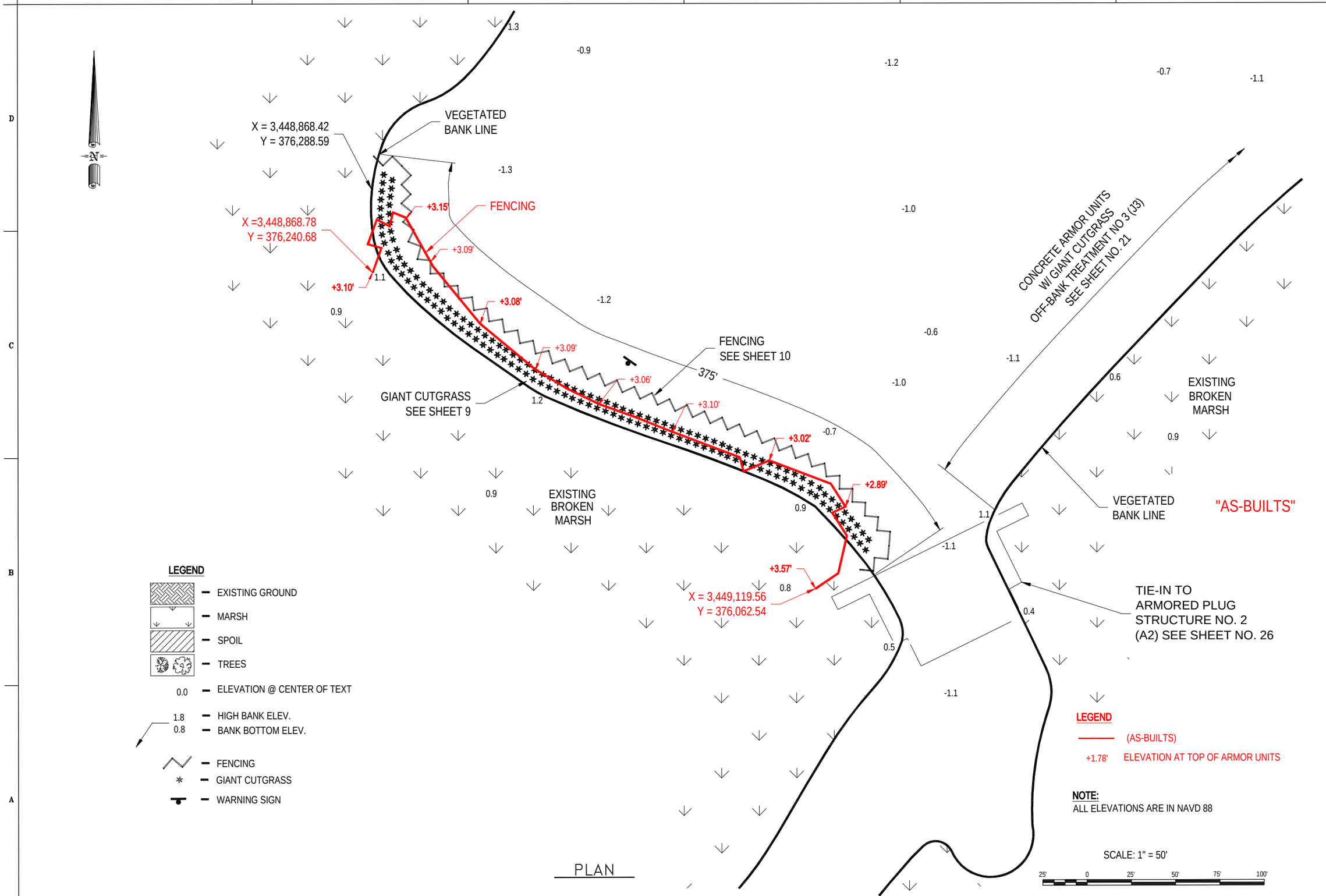

MARK	DESCRIPTION	DATE	APPR.
1	AS-BUILTS	8/16/06	J.A.P.

LOUISIANA DEPARTMENT OF NATURAL RESOURCES
FEDERAL PROJECT NO. XTE-xxx
STATE PROJECT NO. TE-41
MANDALAY BANK PROTECTION DEMO PROJECT
TERREBONNE PARISH, LOUISIANA

FENCING W/ GIANT CUTGRASS
OFF-BANK TREATMENT NO.3 (F3)

SHEET NUMBER
24
DWG. 1 OF 1

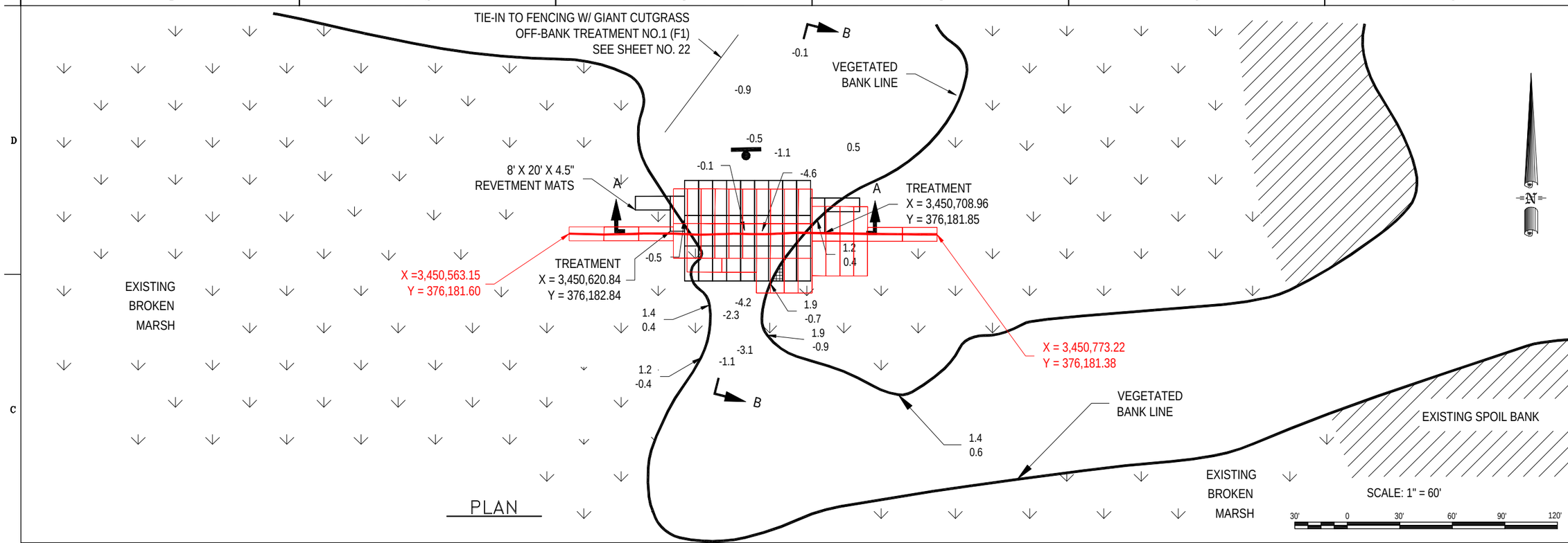

PLAN

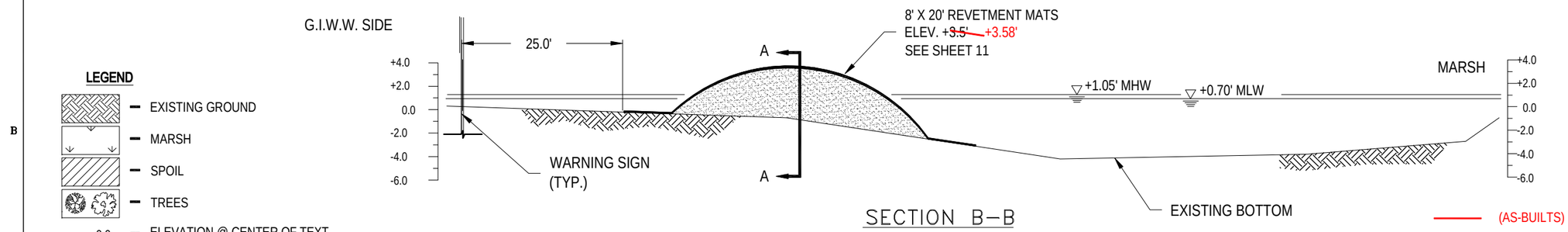

"AS-BUILTS"

SECTION B–B

LEGEND

- EXISTING GROUND
- MARSH
- SPOIL
- TREES
- 0.0 — ELEVATION @ CENTER OF TEXT
- 1.8 — HIGH BANK ELEV.
- 0.8 — BANK BOTTOM ELEV.
- WARNING SIGN

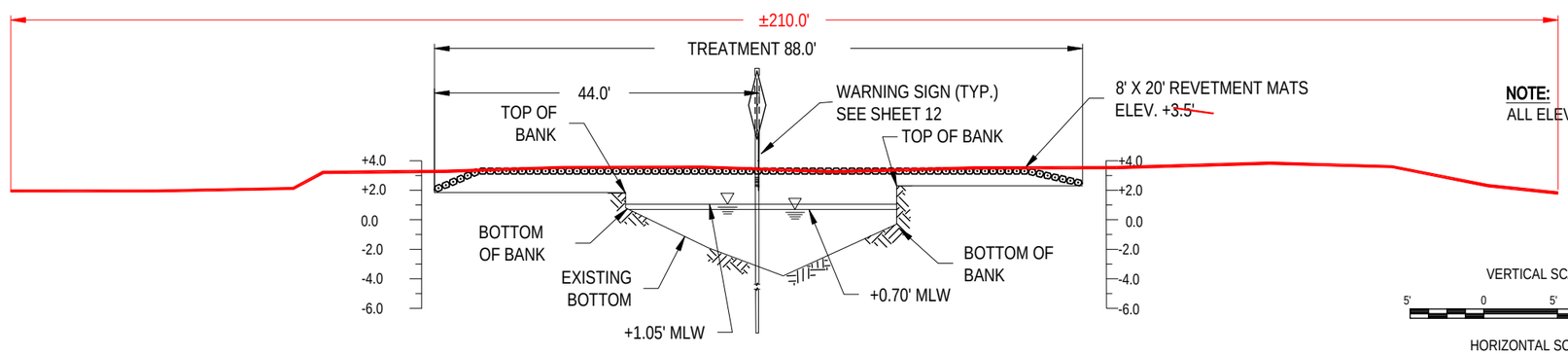

SECTION A–A

NOTE:
ALL ELEVATIONS ARE IN NAVD 88

VERTICAL SCALE: 1" = 10'
5' 0 5' 10' 15' 20'

HORIZONTAL SCALE: 1" = 20'
10' 0 10' 20' 30' 40'

MARK	DESCRIPTION	DATE	APPR.	MARK	DESCRIPTION	DATE	APPR.
1		9/7/04	T.L.F.				

WITH OFFICES IN
METAIRIE: 3500 NORTH HIGHWAY 190, SUITE 600, METAIRIE, LA. 70002
PHONE: (504) 889-9700 FAX: (504) 889-9703

MAIN OFFICE LOCATION:
NEW ORLEANS
NEW ORLEANS, LOUISIANA

DESIGN FILE NAME: 178-52.DWG
SUBMITTED BY: SOLICITATION NO.
PLOT DATE: 10/28/04
PLOT SCALE: 1"=60'
DESIGNED BY: D.C.S.
DRAWN BY: J.M.P.
CHECKED BY: R.A.P.
DATE: NOV. 2001

LOUISIANA DEPARTMENT OF NATURAL RESOURCES
PROTECTION AND RESTORATION OF THE WETLANDS
STATE PROJECT NO. TE-41
MANDALAY BANK PROTECTION DEMO PROJECT
TERREBONNE PARISH, LOUISIANA
ARMORED PLUG
STRUCTURE NO.1 (A1)

SHEET NUMBER
25
DWG. 1 OF 1

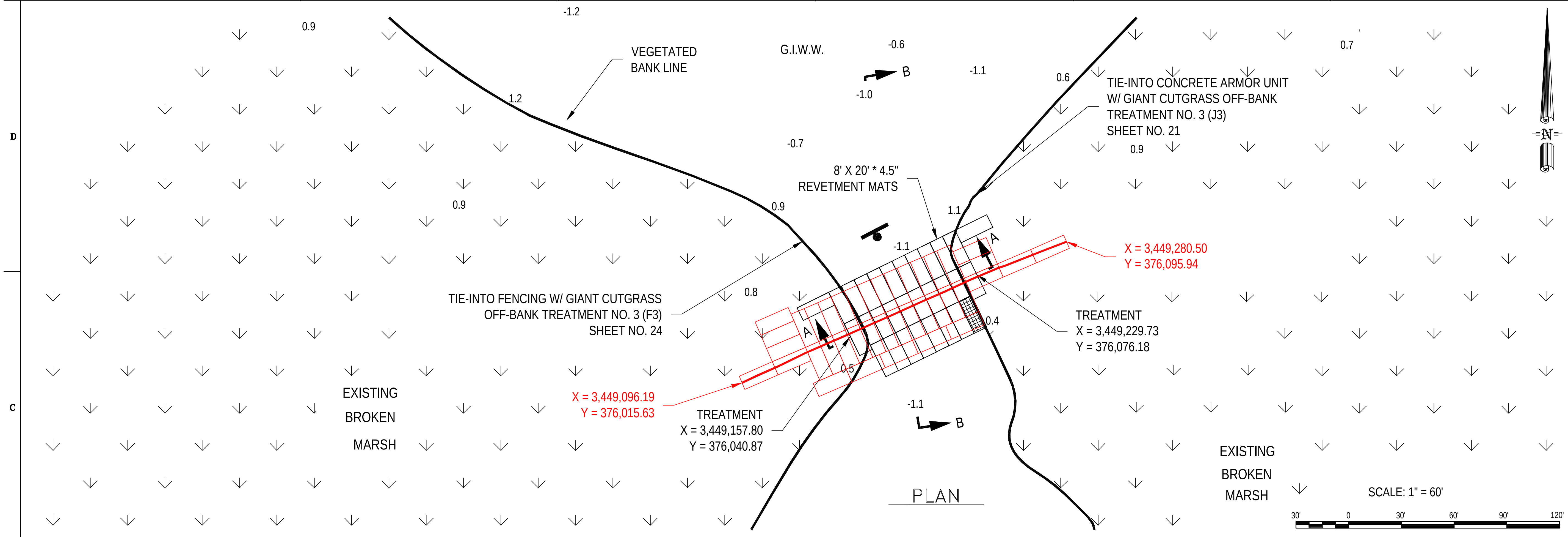

PLAN

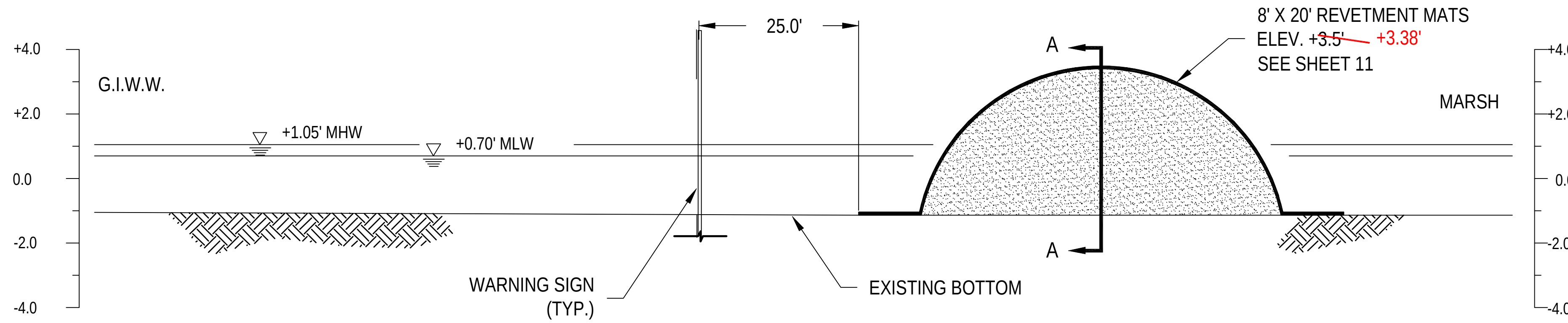

SECTION B–B

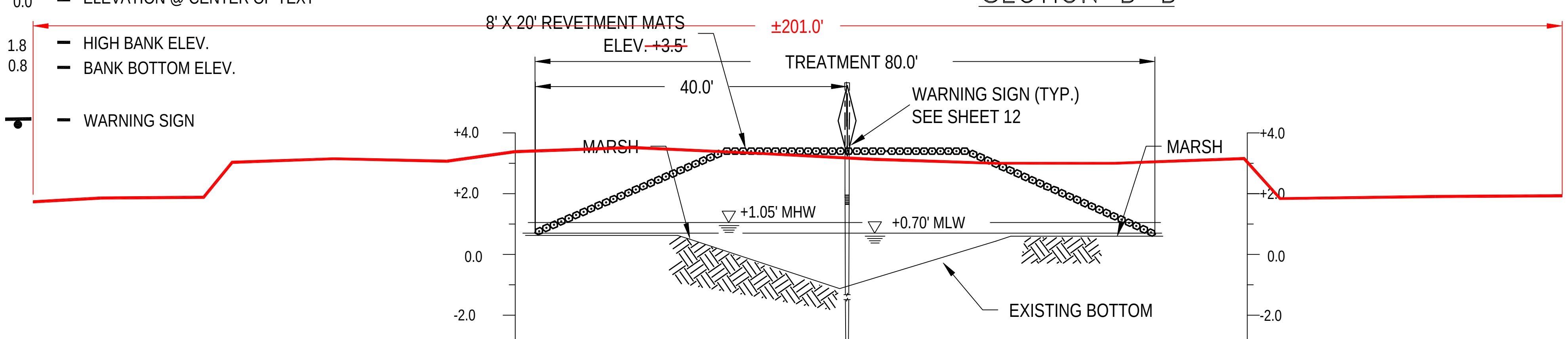

SECTION A–A

LEGEND

- EXISTING GROUND
- MARSH
- SPOIL
- TREES
- 0.0 – ELEVATION @ CENTER OF TEXT
- 1.8 – HIGH BANK ELEV.
- 0.8 – BANK BOTTOM ELEV.
- WARNING SIGN

"AS-BUILTS"

(AS-BUILTS)

NOTE:
ALL ELEVATIONS ARE IN NAVD 88

VERTICAL SCALE: 1" = 5'
2.5' 0 2.5' 5' 7.5' 10'

HORIZONTAL SCALE: 1" = 20'
10' 0 10' 20' 30' 40'

MARK	DESCRIPTION	DATE	APPR.
1	"AS-BUILTS"	2/5/04	J.M.P.

COASTAL ENGINEERING AND ENVIRONMENTAL CONSULTANTS, INC.
MAIN OFFICE LOCATION: 197 ELYSIAN DRIVE HOUMA, LA 70360
WITH OFFICES IN WESTWEGO AND BATON ROUGE, LA
PHONE: (504) 868-3434 FAX: (504) 868-8513

DESIGNED BY: D.C.S.
CHECKED BY: J.M.P.
DRAWN BY: R.A.P.
DATE: NOV. 2001
PLOT SCALE: 1"=60'
PLOT DATE: 3/23/04
DESIGN FILE NAME: 1768-26.DWG
SUBMITTED BY: DESIGN ENGINEER
SOLICITATION NO.

LOUISIANA DEPARTMENT OF NATURAL RESOURCES
FEDERAL PROJECT NO. XTE-Demo
STATE PROJECT NO. TE-41
MANDALAY BANK PROTECTION DEMO PROJECT
TERREBONNE PARISH, LOUISIANA
ARMORED PLUG
STRUCTURE NO.2 (A2)

SHEET NUMBER 26
DWG. 1 OF 1

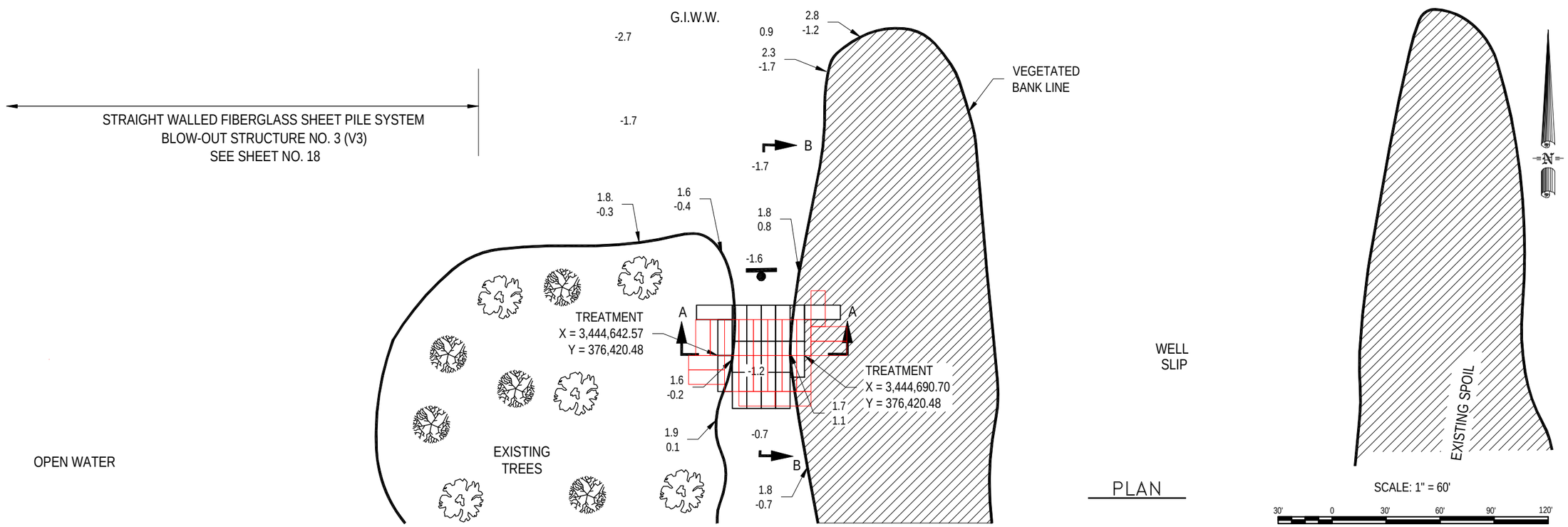

PLAN

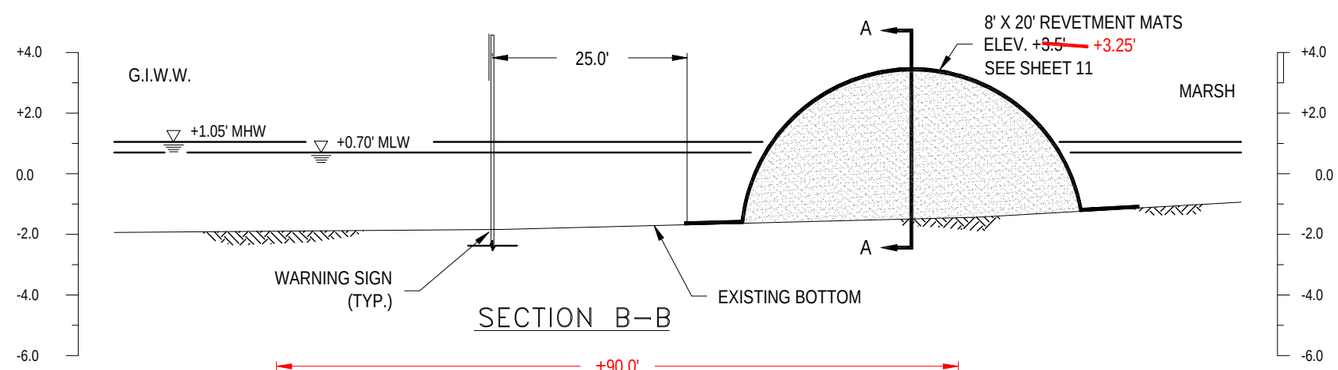

SECTION B–B

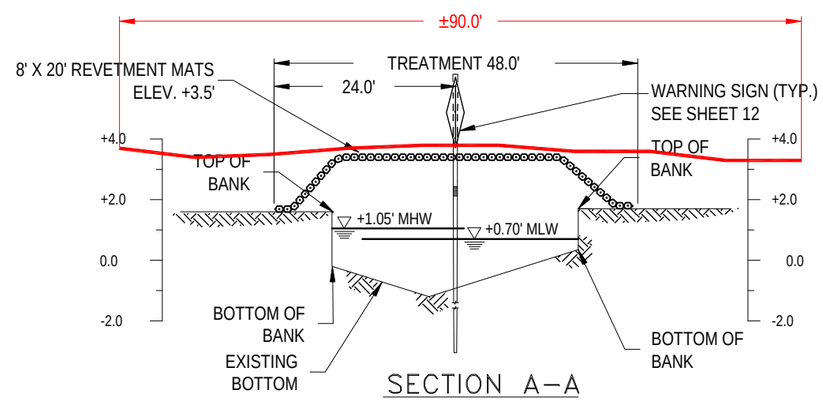

SECTION A–A

(AS-BUILTS)

LEGEND

- EXISTING GROUND
- MARSH
- SPOIL
- TREES
- 0.0 — ELEVATION @ CENTER OF TEXT
- 1.8 — HIGH BANK ELEV.
- 0.8 — BANK BOTTOM ELEV.
- WARNING SIGN

"AS-BUILTS"

NOTE:
1 - "AS-BUILT" SURVEY DATA FOR THIS STRUCTURE SUPPLIED BY CONTRACTOR.
2 - ARMORED PLUG LAYOUT POSITIONING IS APPROXIMATE.

NOTE:
ALL ELEVATIONS ARE IN NAVD 88

VERTICAL SCALE: 1" = 5'
2.5' 0 2.5' 5' 7.5' 10'

HORIZONTAL SCALE: 1" = 20'
10' 0 10' 20' 30' 40'

MARK	DESCRIPTION	DATE	APPR.	MARK	DESCRIPTION	DATE	APPR.
1	"AS-BUILTS"	2/6/06	J.K.S.				

WATER DIRECTORS
WEST PEARL RIVER BASIN BOARD, LA.
PAUL DAVIS CHAIRMAN

MAIN OFFICE LOCATION:
1412 ELK CLEARING
PEARL RIVER

DESIGN FILE NAME: 1786-37.DWG
SUBMITTED BY: 0.0.0.0.0.0.0.0.0.0
PLOT DATE: 3/3/04
PLOT SCALE: 1"=60'
DESIGNED BY: D.C.S.
CHECKED BY: J.K.S.
DRAWN BY: R.A.P.
DATE: NOV. 2006

LOUISIANA DEPARTMENT OF NATURAL RESOURCES
PAUL KEITH DAVIS, SECRETARY
STATE PROJECT NO. TE-41
MANDALAY BANK PROTECTION DEMO PROJECT
TERREBONNE PARISH, LOUISIANA
ARMORED PLUG
STRUCTURE NO.3 (A3)

SHEET NUMBER
27
DWG. 1 OF 1

G.I.W.W.

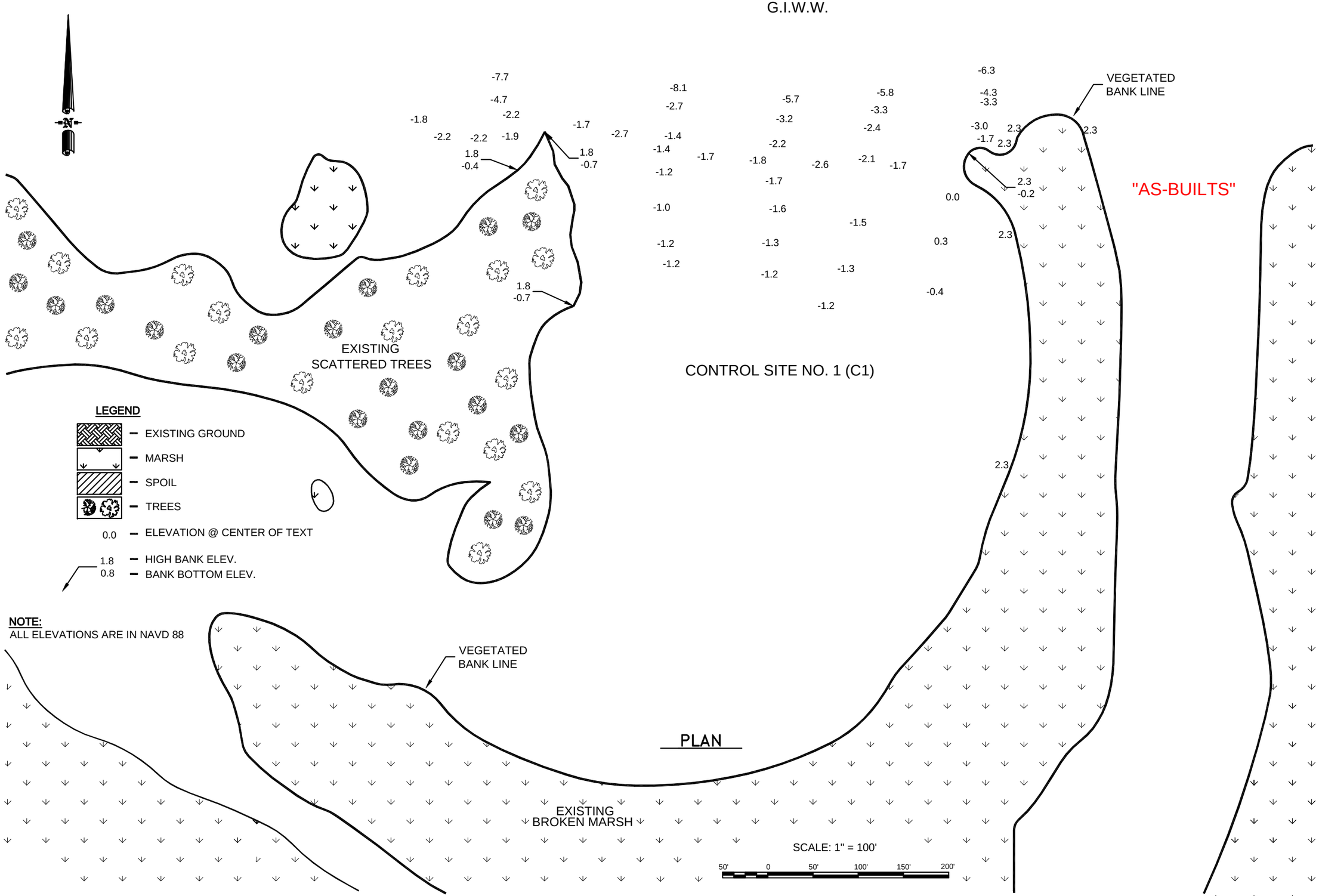

LOUISIANA DEPARTMENT OF NATURAL RESOURCES
FEDERAL PROJECT NO. 1-1-(Pending)
STATE PROJECT NO. TE-41
MANDALAY BANK PROTECTION DEMO PROJECT
TERREBONNE PARISH, LOUISIANA

CONTROL SITE NO.1 (C1)

SHEET NUMBER 28

DWG. 1 OF 1

DESIGNED BY: D.C.S.
CHECKED BY: J.A.S.
DRAWN BY: R.A.P.
DATE: NOV. 2001

PLOT SCALE: SHOWN
PLOT DATE: 2/3/04

DESIGN FILE NAME: 1-T41-018.DWG
SUBMITTED BY:
SOLICITATION NO.

WITH OFFICES IN:
WESTWOOD BLVD STE 100 HOUMA, LA.
PHONE: (985) 868-0693
FAX: (985) 868-0815

MAIN OFFICE LOCATION:
107 ELTON SUITE 100
HOUMA, LA 70360

MARK	DESCRIPTION	DATE	APP'D	BY
1	"AS-BUILTS"	2/3/04		

"AS-BUILTS"

LEGEND

- EXISTING GROUND
- MARSH
- SPOIL
- TREES
- 0.0 — ELEVATION @ CENTER OF TEXT
- 1.8 — HIGH BANK ELEV.
- 0.8 — BANK BOTTOM ELEV.

NOTE:
ALL ELEVATIONS ARE IN NAVD 88

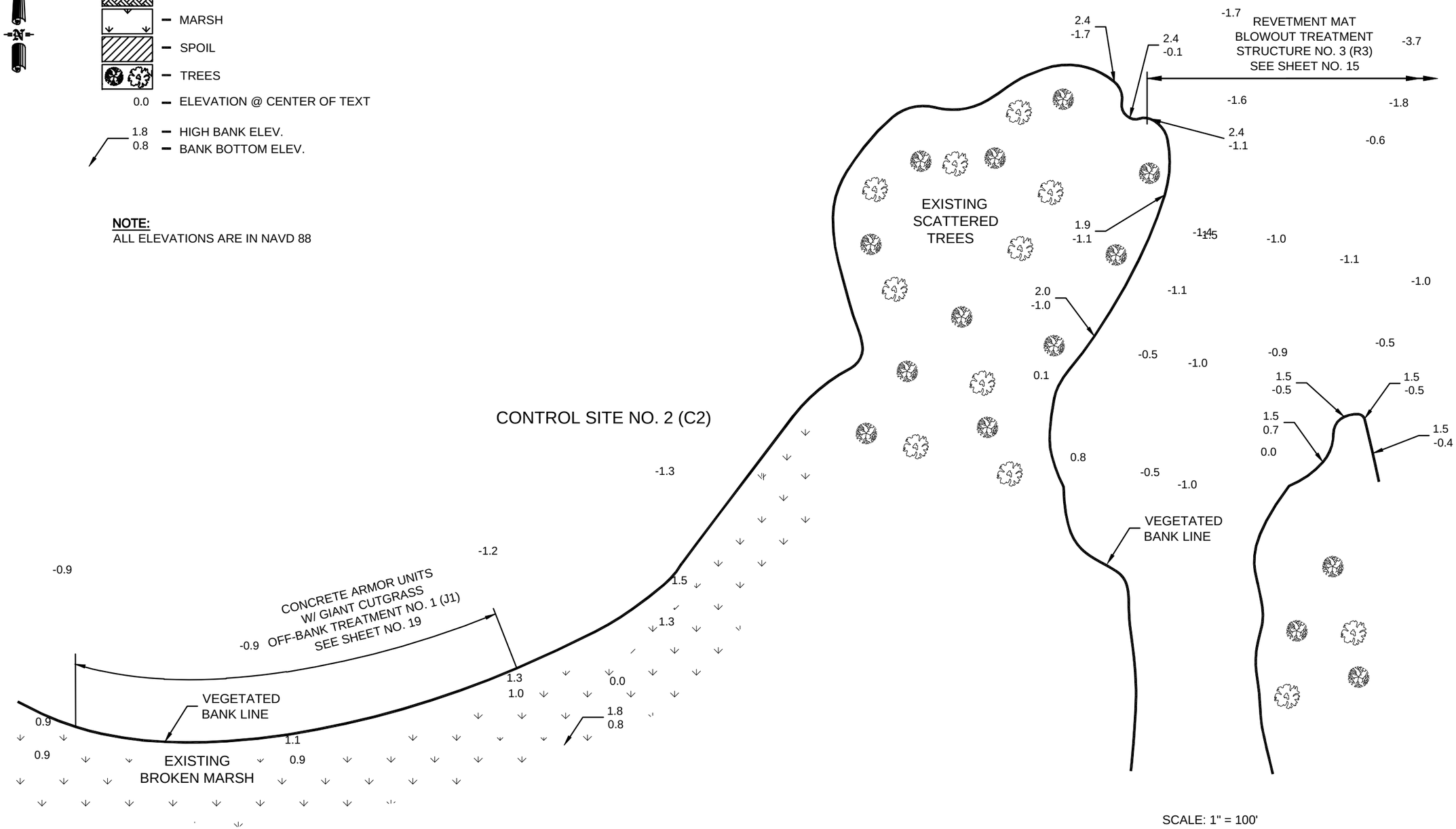

PLAN

SCALE: 1" = 100'

50' 0 50' 100' 150' 200'

MARK	DESCRIPTION	DATE	APP.
1	"AS-BUILTS"	2/4/04	

MAIN OFFICE LOCATION:
1201 ELLA AVENUE
MORGAN CITY, LA. 70380

WITH OFFICES IN:
WESTWOOD BLVD FOURCHON, LA.
PHONE: (985) 851-2400
FAX: (985) 851-2474

DESIGN FILE NAME: 1769-29.DWG
SUBMITTED BY: ----- 00/00/00/00
PLOT DATE: 2/9/04
PLOT SCALE: 1"=100'
DESIGNED BY: D.C.S.
CHECKED BY: J.A.S.
DRAWN BY: P.A.P.
DATE: NOV. 2001

LOUISIANA DEPARTMENT OF NATURAL RESOURCES
FEDERAL PROJECT NO. 1769-29 (Mandalay)
STATE PROJECT NO. TE-41
MANDALAY BANK PROTECTION DEMO PROJECT
TERREBONNE PARISH, LOUISIANA

CONTROL SITE NO.2 (C2)

SHEET NUMBER
29
DWG. 1 OF 1

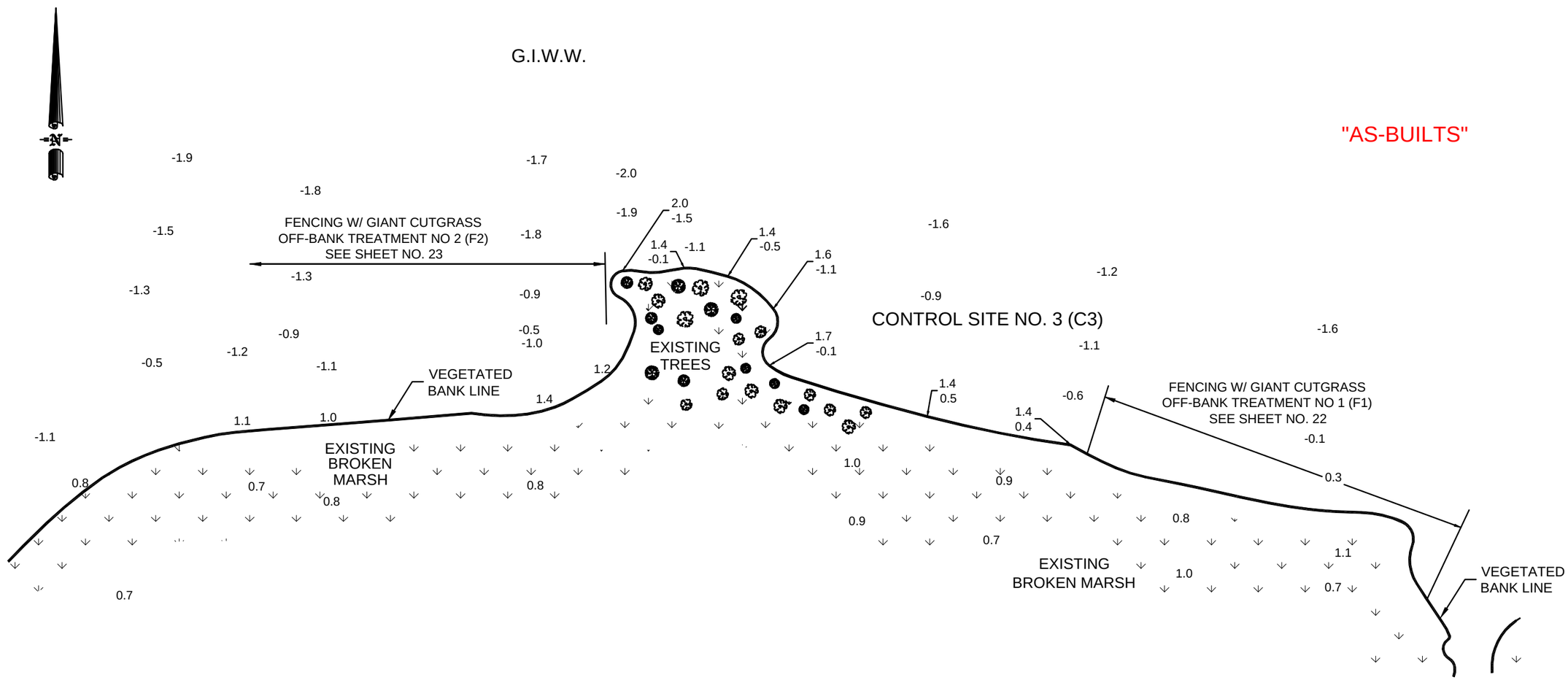

LEGEND

- EXISTING GROUND
- MARSH
- SPOIL
- TREES
- 0.0 — ELEVATION @ CENTER OF TEXT
- 1.4 — HIGH BANK ELEV.
- -0.5 — BANK BOTTOM ELEV.

NOTE:
ALL ELEVATIONS ARE IN NAVD 88

PLAN

SCALE: 1" = 100'

50' 0 50' 100' 150' 200'

MARK	DESCRIPTION	DATE	APP'D
1	"AS-BUILTS"	2/20/04	

MAIN OFFICE LOCATION:
NEW ORLEANS OFFICE
1440 GAL ST.
NEW ORLEANS, LA. 70112

WITH OFFICES IN:
WESTWOOD AND HOUMA, LA.
PHONE: (504) 868-6600
FAX: (504) 868-6615

DESIGNED BY: D.C.S.
DRAWN BY: L.A.P.
CHECKED BY: R.A.P.
DATE: NOV. 2001
PLOT SCALE: 1"=100'
PLOT DATE: 2/20/04
DESIGN FILE NAME: 1780-30.DWG
SUBMITTED BY: -----
SOLICITATION NO.

LOUISIANA DEPARTMENT OF NATURAL RESOURCES
FEDERAL PROJECT NO. TE-19 (Terrebonne)
STATE PROJECT NO. TE-41
MANDALAY BANK PROTECTION DEMO PROJECT
TERREBONNE PARISH, LOUISIANA

CONTROL SITE NO.3 (C3)

SHEET NUMBER
30
DWG. 1 OF 1

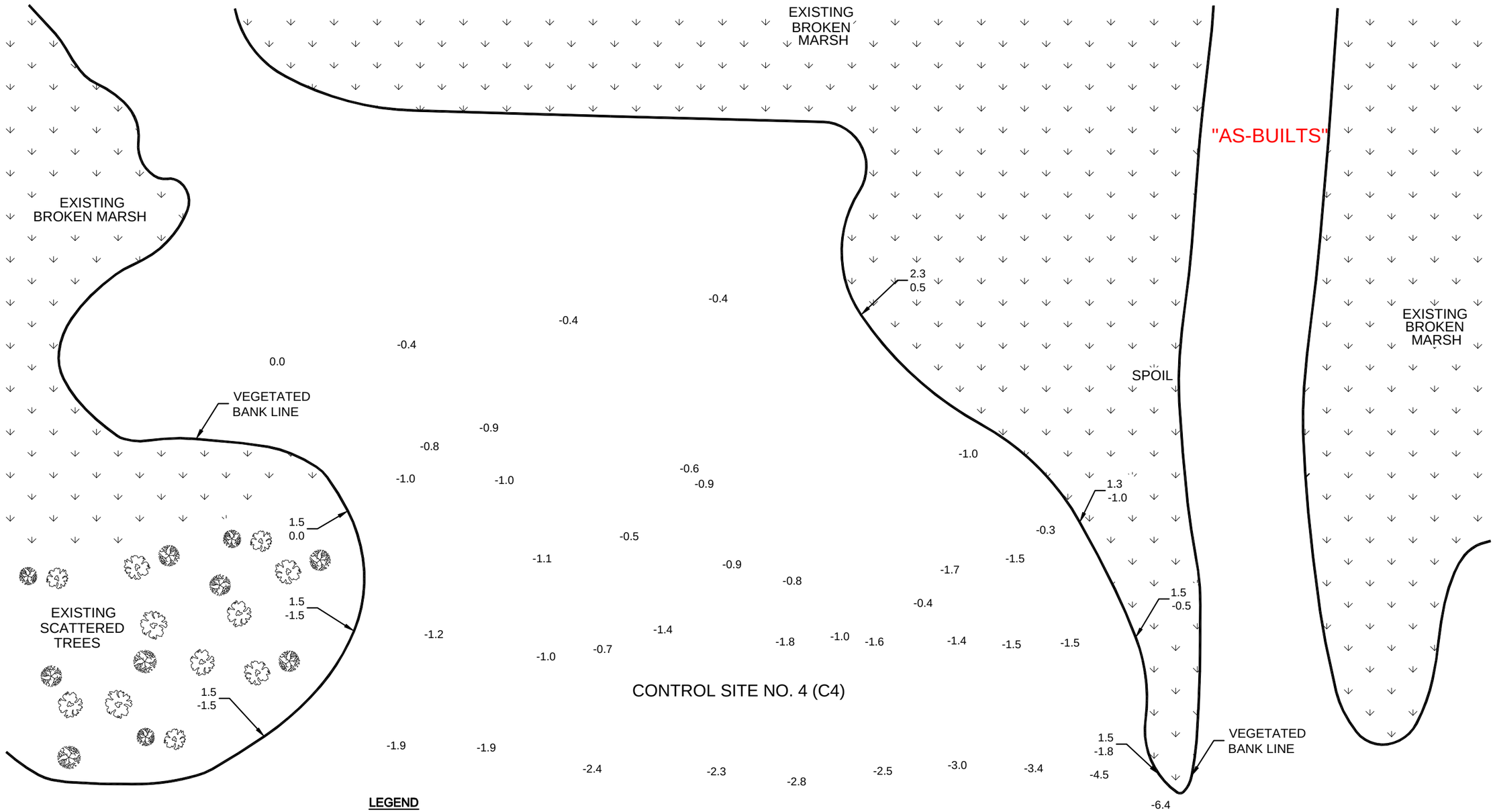

LEGEND

- EXISTING GROUND
- MARSH
- SPOIL
- TREES
- 0.0 – ELEVATION @ CENTER OF TEXT
- 1.8 – HIGH BANK ELEV.
- 0.8 – BANK BOTTOM ELEV.

G.I.W.W.

PLAN

NOTE:
ALL ELEVATIONS ARE IN NAVD 88

SCALE: 1" = 100'

50' 0 50' 100' 150' 200'

LOUISIANA DEPARTMENT OF NATURAL RESOURCES
FEDERAL PROJECT NO. TV-20
STATE PROJECT NO. TE-41
MANDALAY BANK PROTECTION DEMO PROJECT
TERREBONNE PARISH, LOUISIANA

CONTROL SITE NO.4 (C4)

SHEET NUMBER 31
DWG. 1 OF 1

MAIN OFFICE LOCATION:
150 ST. JULIAN STREET
HOUMA, LA. 70360

WITH OFFICES IN:
NEW ORLEANS, BATON ROUGE, LA.
PHONE: (504) 581-6200
FAX: (504) 581-6213

DESIGNED BY: D.C.S.
CHECKED BY: J.A.S.
DRAWN BY: R.A.P.
DATE: NOV. 2001

PLOT SCALE: 1"=300'
PLOT DATE: 2/9/04

DESIGN FILE NAME: 1798-028.DWG
SUBMITTED BY: "REDACTED"
SOLICITATION NO.

MARK	DESCRIPTION	DRAWN BY	DATE
1	"AS-BUILTS"	RAP	2/9/04

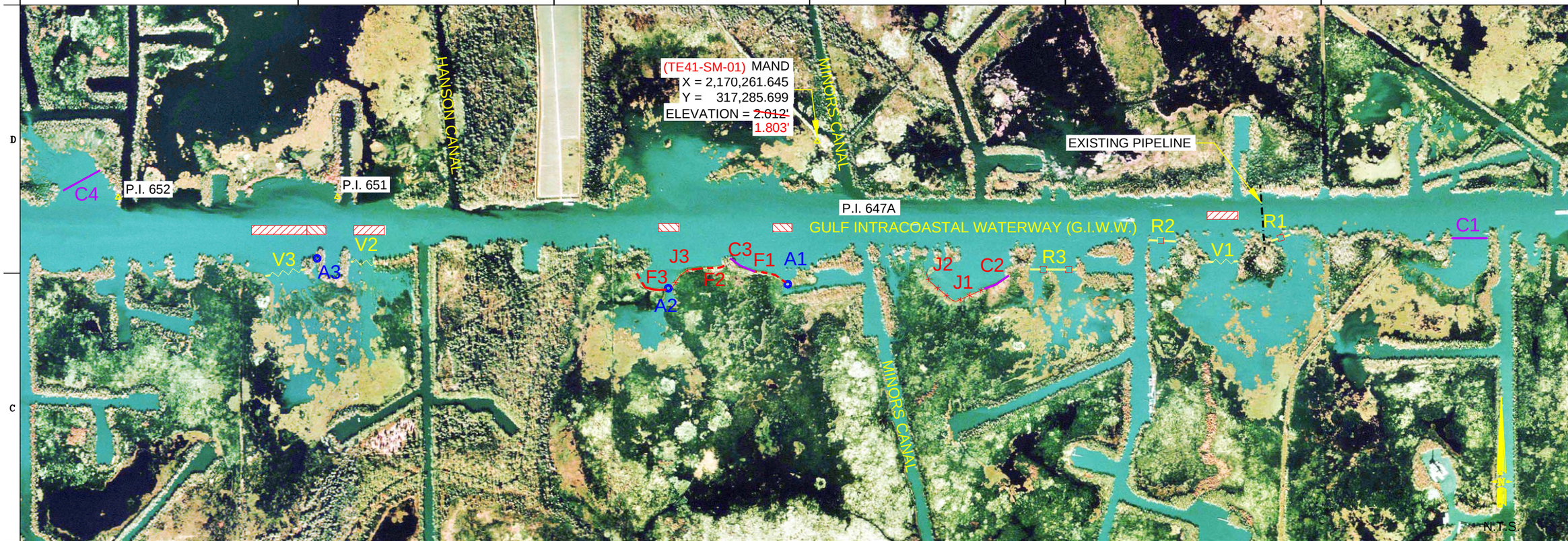

LEGEND

- BORROW AREAS FOR SHEET PILING DREDGE FILL.
  BORROW AREAS TO BE NEAREST TO CENTER LINE OF G.I.W.W. AND NOT TO EXCEED 2.0' DEPTH
- BORROW AREAS FOR ARMORED PLUG DREDGE FILL.
  BORROW AREAS TO BE NEAREST TO CENTER LINE OF G.I.W.W. AND NOT TO EXCEED 7.0' DEPTH
- 2' DEPTH TO BE STRIPPED

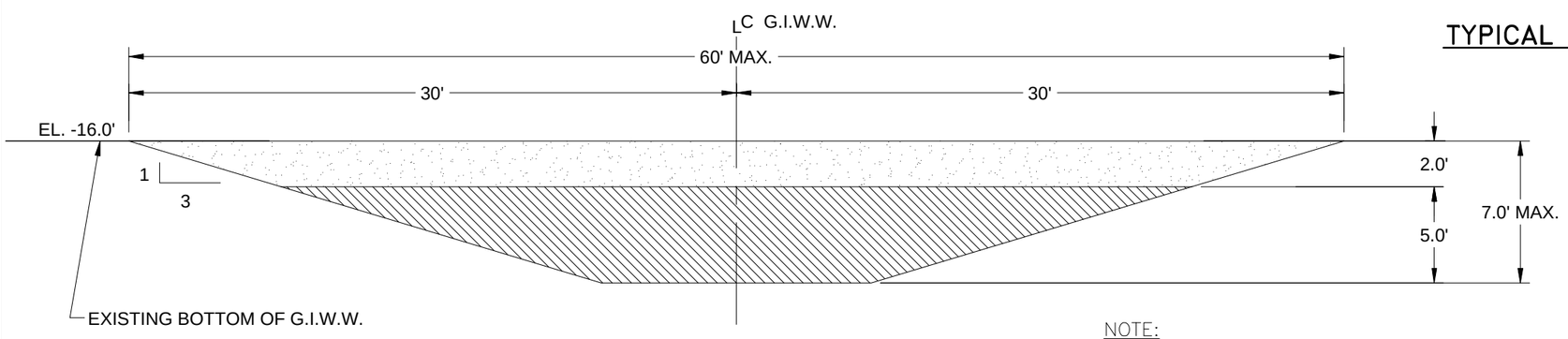

TYPICAL SECTION – BORROW AREAS FOR A1,A2, & A3

NOTE:
REQUIRED VOLUME FOR ARMORED PLUGS IS APPROXIMATE 4 CY/FT

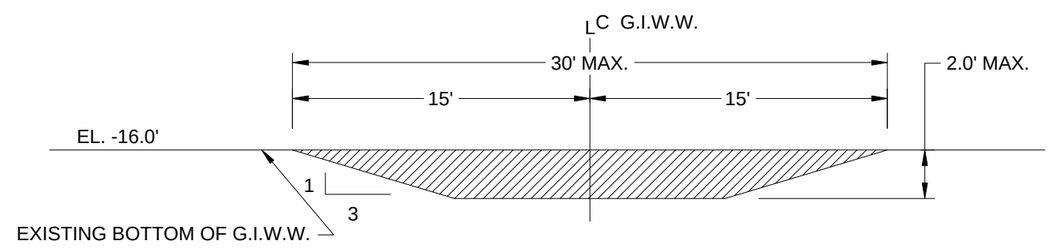

TYPICAL SECTION – BORROW AREAS FOR V1,V2, & V3

"AS-BUILTS"

NOTE:
ALL ELEVATIONS ARE IN NAVD 88

VERTICAL SCALE: 1" = 6'

3' 0 3' 6' 9' 12'

MARK	DESCRIPTION	DATE	APPR.	MARK	DATE	APPR.
1	"AS-BUILTS"	2/5/04	J.M.P.			

MAIN OFFICE LOCATION:
100 W. TUCKER DRIVE
HOUMA, LA. 70360

WITH OFFICES IN:
WESTWEGO AND BATON ROUGE, LA.
PH: (504) 436-8670
FAX: (504) 436-8675

PLOT DATE: 12/03/03	DESIGN FILE NAME: 1768-32.DWG
PLOT SCALE: N.T.S.	SUBMITTED BY:
	SOL-CITATION NO.

DESIGNED BY: D.C.S.
CHECKED BY: J.M.P.
DRAWN BY: D.A.P.
DATE: NOV. 2001

LOUISIANA DEPARTMENT OF NATURAL RESOURCES
FEDERAL PROJECT NO. XTE-Demo
STATE PROJECT NO. TE41
MANDALAY BANK PROTECTION DEMO PROJECT
TERREBONE PARISH, LOUISIANA

BORROW AREAS
PLAN & SECTIONS

SHEET NUMBER
32

DWG. 1 OF 1

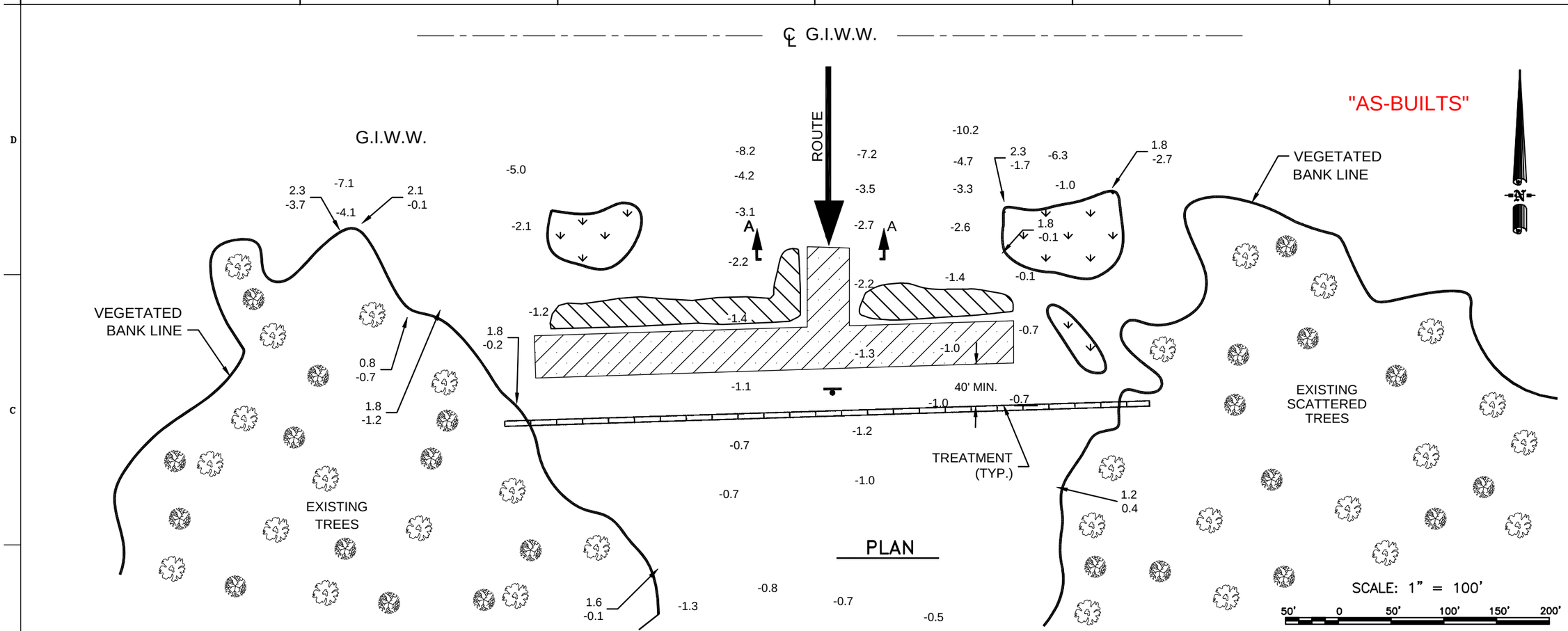

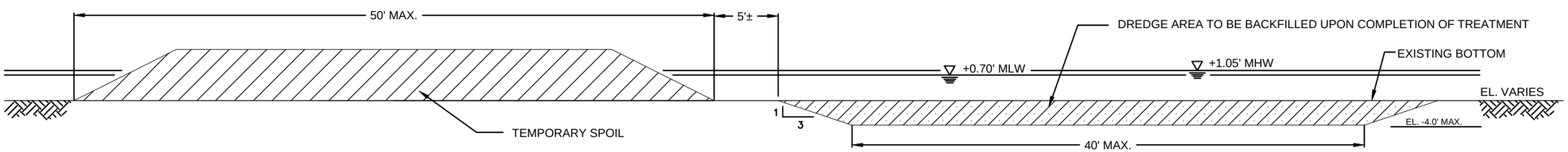

LEGEND

- FLOATATION CHANNEL DREDGE AREA TO BE BACKFILLED DREDGE MATERIAL UPON COMPLETION OF TREATMENT
- FLOATATION CANNEL TEMPORARY SPOIL PLACEMENT
- EXISTING GROUND
- MARSH
- SPOIL
- TREES

0.0 – ELEVATION @ CENTER OF TEXT

1.8 – HIGH BANK ELEV.
0.8 – BANK BOTTOM ELEV.

– WARNING SIGN

TYPICAL SECTION A–A

NOTES:

1) ALL ELEVATIONS ARE IN NAVD 88
2) ALL TREATMENT CONSTRUCTION SHALL BE ACCESSED DIRECTLY FROM G.I.W.W.
3) FLOATATION CHANNELS ARE ALLOWED FOR BLOWOUT TREATMENT AND ARMORED PLUG LOCATIONS ONLY. THESE INCLUDE SITES V1-V3, RI-R3, AND A1-A3. NO FLOATATION CHANNELS ARE TO BE DREDGED FOR OFF-BANK TREATMENT SITES.
4) ONE PERPENDICULAR AND ONE PARALLEL FLOATATION CHANNEL IS ALLOWED FOR SITES LISTED IN NOTE 3 AND AS SHOWN IN THE PLAN VIEW. THE PARALLEL CHANNEL MUST BE AT LEAST 40 FEET FROM THE EDGE OF THE STRUCTURE.
5) SHOULD THE CONTRACTOR REQUIRE FLOATATION CHANNEL, THE COST FOR THIS ITEM MUST BE INCLUDED IN THE COST OF THE STRUCTURE FOR EACH AND EVERY TREATMENT SITE AND/OR LOCATION THAT SHALL BE REQUIRED.
6) NO EMERGENT MARSH IS TO BE DAMAGED DURING DREDGING OPERATIONS.

SCALE: 1" = 6'
3' 0 3' 6' 9' 12'

LOUISIANA DEPARTMENT OF NATURAL RESOURCES
FEDERAL PROJECT NO. TE-41
STATE PROJECT NO. TE-41
MANDALAY BANK PROTECTION DEMO PROJECT
TERREBONNE PARISH, LOUISIANA
TYPICAL FLOATATION CANAL PLAN & SECTION

SHEET NUMBER 33
DWG. 1 1OF